PRATER®
AIRLOCKS • MILLS • SEPARATORS

# Rotary Sifters

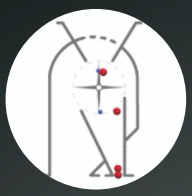

## KEY FEATURES

- Standard stainless steel body and hoppers with numerous internal construction options
- Greater capacity per square inch of screen cloth, providing more output using a smaller footprint than competitors
- Three bearings for improved rotor support and minimal wear to shaft seals
- Fully adjustable multi-paddle rotor for customized screening capability
- Rapid-removal of rotor specially designed for quick cleaning and maintenance
- Easily-inspected screens, either in place or when removed
- Adjustable screen frame designed for improved performance from a variety of screen fabrics
- Easy access to all internal working parts
- Low-noise, dust-tight, vibration-free operation without the need for external guarding
- Optional patented Rota-Trap® for pre-screening large-sized foreign materials
- Optional quick-clean designs with tool-free removal of internal parts
- Optional sanitary finishes and construction for specialty applications
- Options for compliance with USDA, FDA, BISSC, 3-A, and other U.S. and European regulators

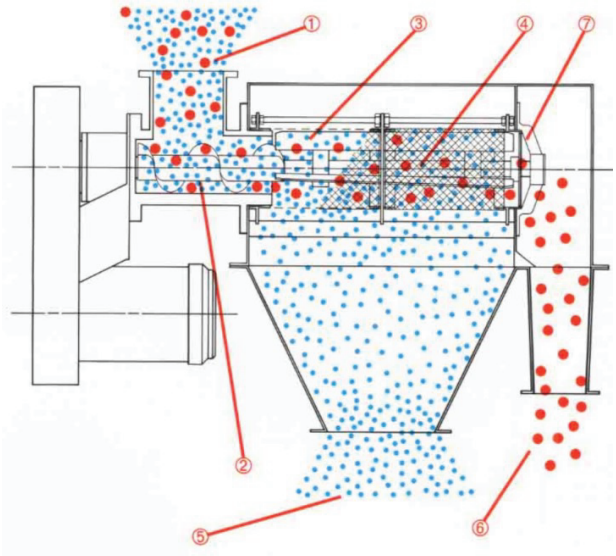


## Step-By-Step Operational Flow

1 - Material to be processed is fed into Rota-Sieve inlet
2 - The auger then feeds the material into the screen area
3 - The rotating blades of the rotor assembly
4 - Spread the material across the screen
5 - The product (minus the screen size) passes through the screen
6 - The overs (plus the screen size) of up to 15% are conveyed forward and discharged
7 - The retaining baffle ring limits discharging material to oversize particles only, improving screening efficiency

## Typical Application Products Handled

Alfalfa, Ground
Alumina
Ascorbic Acid
Baby Foods
Baking Soda
Bone Meal
Bran
Bentonite
Borax
Cake Mix
Calcium Carbonate
Carbon Black
Casein
Cheese Powder
Chalk
Coal, Powdered
Cocoa Powder
Coke, Powdered
Corn Meal
Dehydrated Vegetables
Detergent
Dextrose
Diatomaceous Earth
Donut Mix
Eggs, Powdered
Epoxy Resin
Epoxy Powder Coatings
Fertilizer, Chemical
Fibers
Fire Extinguisher Powder
Fish Meal
Flour, Various
Fungicide
Gypsum
Herbicide
Hulls, Ground
Iron Oxide
Limestone
Meal, Soybean
Metallic Powders
Milk Powder
Phenolic Resin
Pigments, Various
Protein
Salt
Silica
Soap
Sodium Bicarbonate
Spices
Starch, Various
Sugar
Talcum
Titanium Dioxide
Tobacco, Ground
Urea
Vitamins
Whey, Powdered

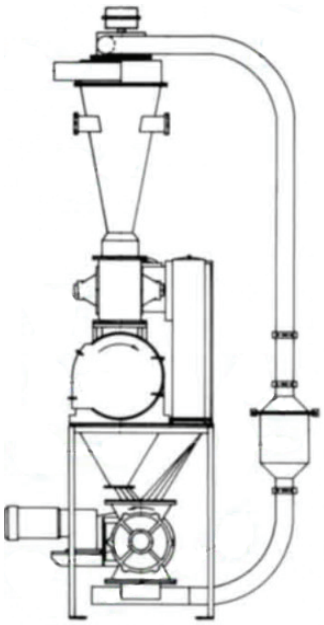

## Rota-Sieve Centrifugal Sifter And Scalper Standard Features

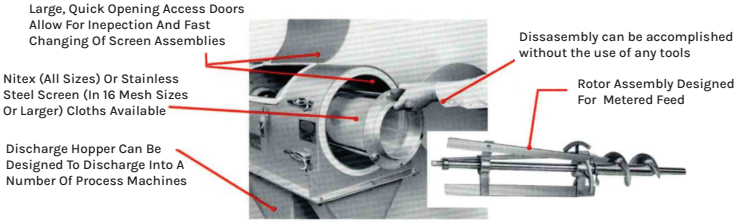

# GENERAL DIMENSIONS*

| Model Number | HP Mill | Effective Screen Area in^2 | A in mm | B in mm | C in mm | D in mm | E in mm |
|---|---|---|---|---|---|---|---|
| RS-91 | 3 | 410 | 62<br>1578 | 55<br>1397 | 28.5<br>724 | 19<br>483 | 11<br>279 |
| RS-700 | 3 | 725 | 89<br>2261 | 61<br>1549 | 63<br>1600 | 45<br>1143 | 11<br>279 |
| RS-151 | 5 | 942 | 69.5<br>1765 | 61.5<br>1556 | 29.5<br>743 | 25<br>629 | 14<br>360 |
| RS-301 | 7.5 | 1872 | 80.5<br>2045 | 94<br>2388 | 33.5<br>851 | 28.5<br>724 | 20<br>502 |

***GENERAL DIMENSIONS ONLY:** Do not use for engineering purposes. Please request a certified drawing for all layout or construction uses.

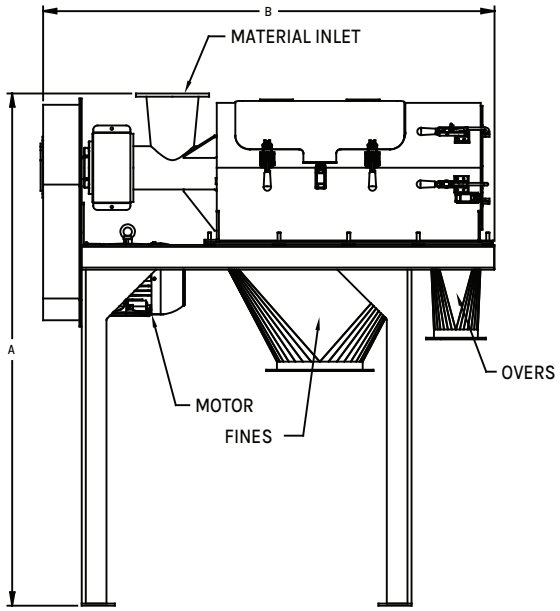


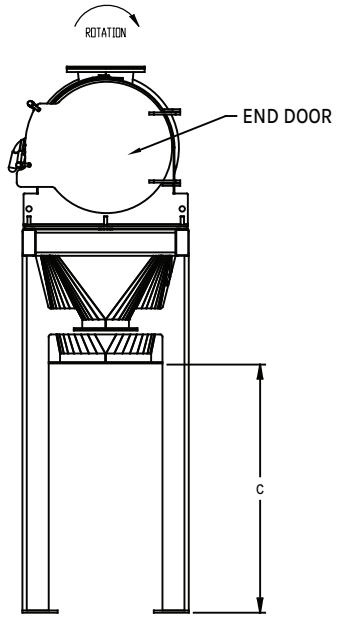


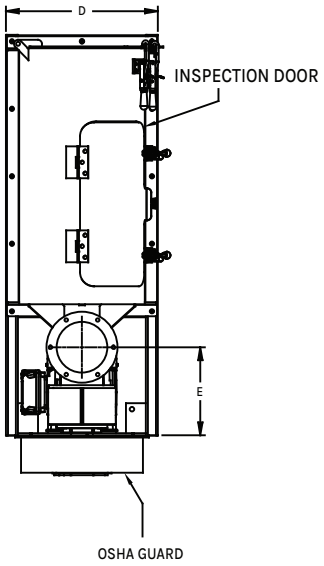


## KEY BENEFITS

**The simple design and lightweight parts of the Rota-Sieve make standard inspections an easy and straightforward process.**

**Our rota-sieves are also ideal for the sifting, scalping and classifying of a wide variety of particles and products, including:**

- **Bulk, free-flowing powders**
- **Granulated substances**
- **Agglomerated materials**

**Our units are easy to maintain and designed for many years of trouble free service. Self-cleaning screen fabrics ensure that the Rota-Sieve® can separate to 200-mesh size without the need for anti-blinding mechanisms.**

## THEORY OF OPERATION

**Prater Rotary Sifters harness the power of centrifugal force to fluidize and accelerate particles toward the screen surface. The sifter inlet is specially fitted with an auger that moves materials into the screening chamber, where rotor paddles accelerate the particles outward. Finer particles pass through the screen and are discharged into a large hopper. Rotor paddles are precisely pitched to force coarser material to the end of the chamber, where they are expelled into a separate discharge hopper. Over-size and near-size particles interact with the screening surface during operation, causing a natural vibration in the fabric that enhances free flow.**


**2 Sammons Court, Bolingbrook, IL 60440**
**1-844-942-2466 • praterindustries.com**