PRATER INDUSTRIES

BAV AIRLOCK & RAIL SYSTEM

INSTALLATION, OPERATION & MAINTENANCE MANUAL

MODEL:_____

SERIAL NO:_____

2 Sammons Court Bolingbrook, IL 60440
Phone 630-759-9595 • Fax 630-759-6099

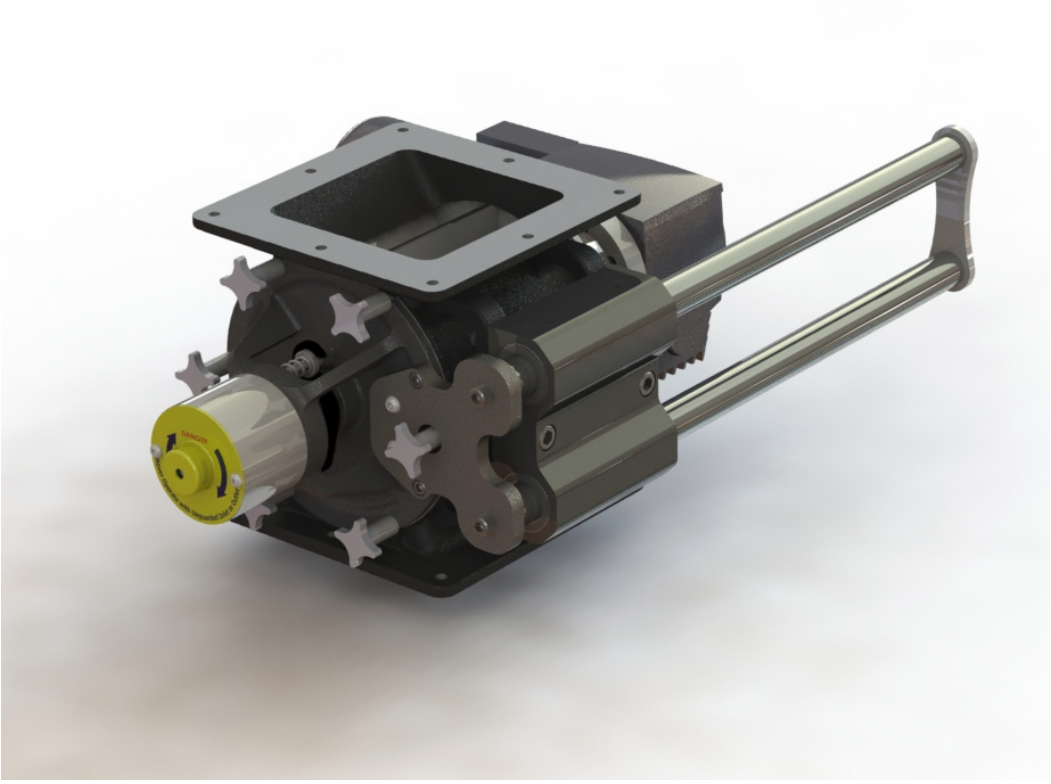

TABLE OF CONTENTS

SECTION 6: DRAWINGS AND PARTS LIST

APPENDIX

Section

1

Section 1: Safety Rules

1.1 Safety Rules

Safety must be considered through all facets of operation and maintenance on any mechanical device. Using proper tools and methods will help prevent accidents and serious injury to you and your fellow workers.

Proper operating procedures and safety precautions are listed throughout this manual. Study them carefully and follow instructions; insist that those working with you do the same. Most accidents are caused by someone's carelessness or negligence.

Examples of the four types of safety notices (Danger, Warning, Caution and Notices) in this manual are listed below:

⚠ DANGER	**DANGER: INDICATES AN IMMINENTLY HAZARDOUS SITUATION IN WHICH PERSONAL INJURY OR DEATH MAY OCCUR.**
⚠ WARNING	**WARNING: INDICATES A POTENTIALLY HAZARDOUS SITUATION IN WHICH PERSONAL INJURY OR DEATH MAY OCCUR.**
CAUTION	**CAUTION: INDICATES A SITUATION WHERE DAMAGE TO THE EQUIPMENT COULD RESULT.**
NOTICE	**PROVIDES HELPFUL INFORMATION FOR PROPER OPERATION OF THE AIRLOCK**

1.2 Safety Precautions

WARNING

OPERATORS MUST BE INSTRUCTED NOT TO PUT HANDS, FINGERS OR OTHER FOREIGN OBJECTS IN THE MACHINE, AND NOT TO REMOVE ANY COVER, DOOR, HATCH OR OTHER PROTECTIVE DEVICES PLACED ON THIS MACHINE FOR THE SAFETY OF THE OPERATOR. ANY ATTEMPT TO DEFEAT THESE DEVICES COULD RESULT IN SERIOUS INJURY.

DANGER

ELECTRICAL SERVICE TO THE MACHINE MUST BE LOCKED OUT WHILE ANY REPAIRS OR ADJUSTMENTS ARE BEING MADE OR WHILE ANY COVER, DOOR, HATCH OR OTHER PROTECTIVE DEVICE IS NOT IN PLACE.

The precautions listed in this manual may not be all inclusive and others might exist, that are specific to your operation or industry. In addition, nearly all employers are now subject to the Federal Occupational Safety and Health Act of 1970, as amended, which require that an employer be kept abreast of regulations, which will continue to be issued under its authority.

The Airlock must always be operated in accordance with the instructions and precautions in this manual and on the caution plates attached to the equipment. Only workers completely familiar with the instructions and precautions in this manual should be permitted to operate the unit. The operators should thoroughly understand these instructions and precautions before attempting to operate this equipment.

Illustration 1-1 is a checklist of safety precautions and proper operating procedures. Failure to observe and follow the precautions may result in serious personal injury or property damage.

Safety Checklist

ALWAYS operate Airlocks in accordance with the instructions in this manual.

DO NOT open inspection doors while unit is in motion.

NEVER work on unit and related components unless electric power and motor drive have been locked out and tagged. The National Electrical Code requires a manually operable disconnect switch located within sight of the motor, or a controller disconnecting means capable of being locked if not within sight of the motor.

DO NOT use the Airlock for processing of material other than the specific application for which it was designed.

AVOID poking or prodding into unit openings with bar or stick.

ALWAYS have a clear view of unit loading and unloading points and all safety devices.

KEEP area around unit, drive and control station free of debris and obstacles.

NEVER operate unit without guards and all safety devices in position and functioning.

ALWAYS allow unit to stop naturally. DO NOT attempt to artificially brake or slow motion of unit.

NEVER put your hand near or in the inlet or outlet of the Airlock while it is operating or stalled.

Illustration 1-1: Prater BAV Airlock Safety Check List

1.3 BAV Airlock Safety Labels

Illustration 1-2 shows the safety labels used on the BAV Airlock. These labels are important for worker information and must not be removed from the unit.

Illustration 1-2: Prater BAV Airlock Safety Labels

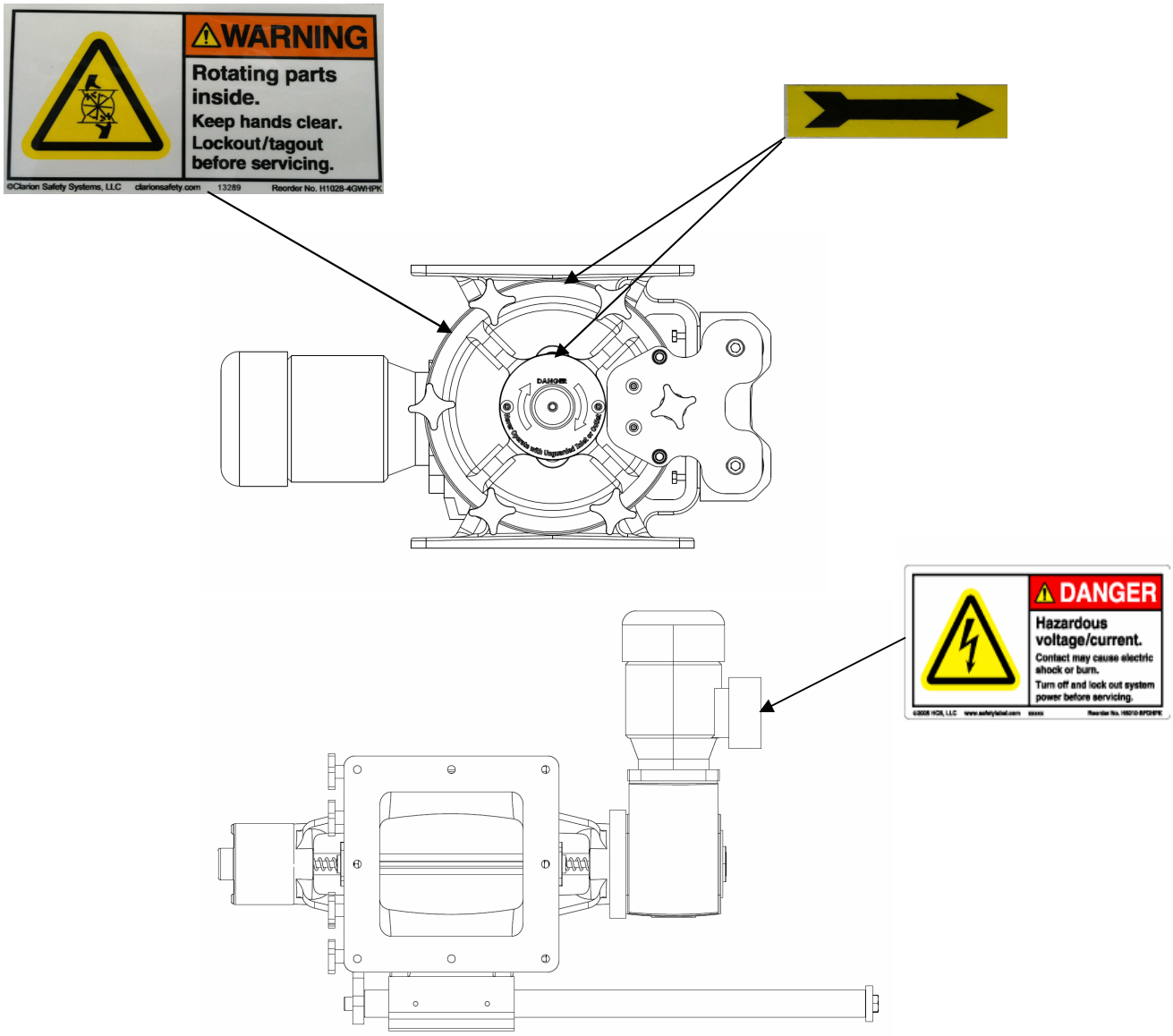

Illustration 1-3: Prater BAV Airlock Safety Label Placement

1.4 BAV Airlock Pinch Points

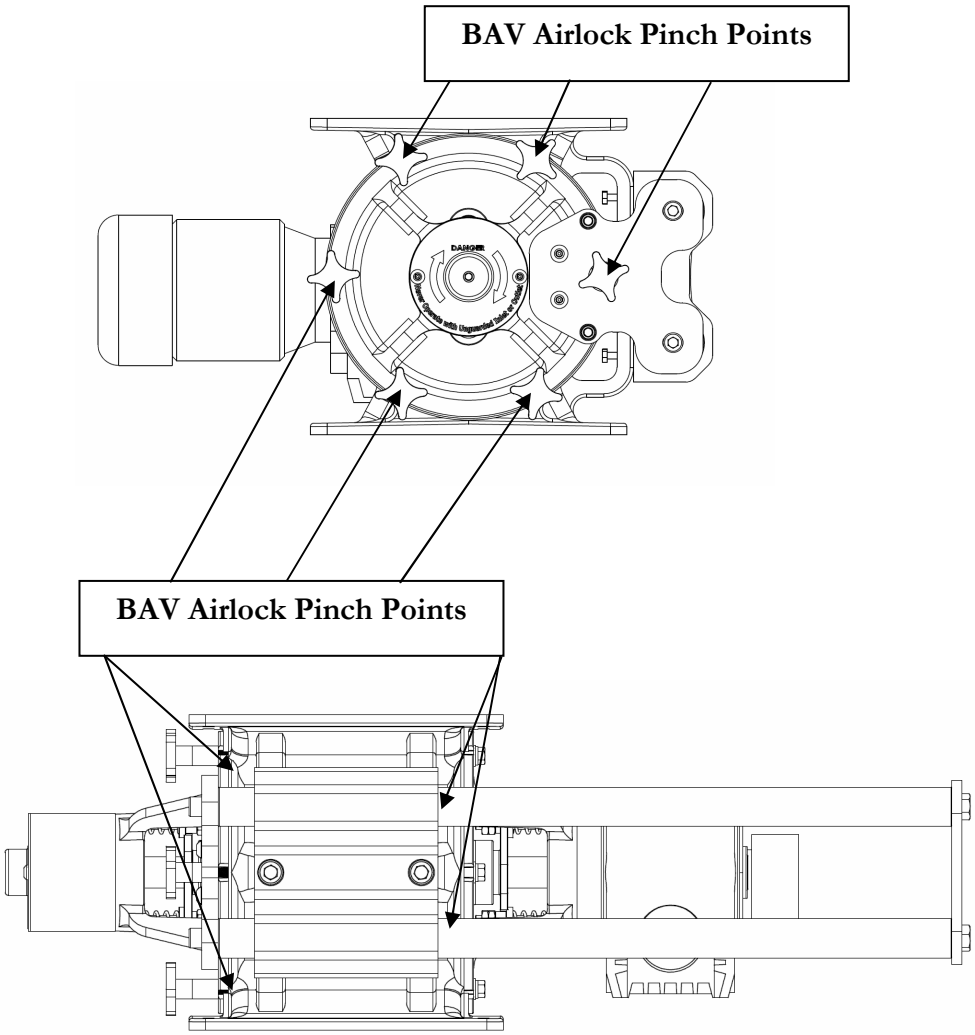

WARNING

The BAV Airlock contains several points where care is needed to avoid bodily injury when opening or closing the Airlock. Always make sure care is used when opening or closing the BAV Airlock. Failure to do so may result in serious injury.

Illustration 1-4: Prater BAV Airlock Pinch Points

Section

2

Section 2: Introduction

2.1 Manual Overview

This manual describes the installation requirements, procedures, and routine maintenance of Prater's BAV Airlock. Refer to this manual before beginning and during installation. Keep the manual available for future reference. Exploded views are located in the rear of the manual. The procedures throughout this manual refer to these exploded views.

Reliable operation, personnel safety, and long service life of this equipment depend on three important considerations:

- The care exercised during installation.
- The frequency/quality of maintenance and periodic inspections.
- A common sense approach to the BAV Airlocks operation.

To keep operating costs down and profits up, carefully follow the instructions listed for installation, operation, safety, and maintenance.

2.2 Receiving The Unit

When your shipment arrives, thoroughly inspect the BAV Airlock and all related equipment. In the event of shipping damage, note the problem on the bill of lading or freight bill and make sure you obtain the driver's signature for a possible claim against the delivering carrier.

NOTICE

The RECEIVER is responsible for Inspection and filing claims against the CARRIER for any damage to the BAV Airlock in transit.

2.3 Before Installation

Be sure the installation crew or millwrights are aware of installation requirements. If they have any questions or are unsure of proper procedures, clarify the matter to avoid improper installation. Section 3 of this manual covers important steps to ensure safe, vibration-free installation. Personnel responsible for installation should be familiar with these procedures.

In preparing for installation, make sure you provide for all appropriate safety devices. **Prater** Industries, Inc. does not install your machine. It is your responsibility to provide lockout switches, guards, and other safety devices and safety procedures to protect the machine operator or maintenance personnel.

NOTICE

If the airlock is to be installed in an enclosed room it is important to allow adequate venting to provide proper air volume to the BAV Airlock. Inadequate air volume will severely restrict throughput of the system and may cause other problems.

2.4 Before Operation

Make sure operating personnel are well trained in procedures for operating and maintaining the BAV Airlock. In particular, make sure they understand the essential safety precautions described in Section 1 of this manual.

2.5 BAV Airlock Applications

Prater BAV Airlocks are primarily used to perform three basic functions:

- Feed free-flowing material from a bin or hopper
- Deliver fines from a collector while sealing against air loss
- Feed free-flowing material into or out of a pneumatic conveying system against pressure or vacuum.

Prater "C" and "S" Airlocks are the models generally chosen for applications where air leakage or gas losses are important considerations. This includes the transfer of materials through pneumatic conveying systems against pressure.

2.6 Unit Design

Prater BAV Airlocks unique design include:

- Eight blade fully welded rotor for maximum seal
- 3/8" blade thickness
- Bosses drilled and tapped for pocket venting
- Heavy cast housing and endplates for added rigidity (Cast Iron, Ductile Iron, or Stainless Steel)
- Custom designed rotors for every application
- Heavy duty outboard bearing design for prolonged bearing life and to permit access to seals
- Double sealed, lubricated for life bearings

- Stationary stub shaft design for easy removable rotor
- Endplate design that can be drilled and tapped for air purge seals
- Rotor running clearance of .003" - .006" * for minimal air leakage
- Endplate design that incorporates bearing retainer and packing gland
- Externally accessible and easy to change abrasion resistant packing seals
- Multiple packing design for improved sealing
- Food Grade Teflon, high temperature and air purge seals available
- Linear rail system for easy access to Airlock rotor and housing for servicing and cleaning
- Removable hand knobs for quick endplate and rotor removal

* Note: Rotor clearances depend on BAV Airlock application

2.7 Operating Principle

The BAV Airlock has been manufactured with quality materials and workmanship and, if given reasonable care, will perform perfectly with minimum maintenance. Each part has been machined to close tolerance to assure the best possible fit between all components as well as interchangeability. The rotor revolves in the housing at low speeds and carries material vertically from the inlet to the discharge where it drops out.

2.8 BAV Airlock Specifications

2.8.1 Dimensions

PAV/QTA/BAV	6	8	10	12
Rotor Diameter (Inches)	7.489	9.364	11.615	13.990
Rotor Length (Inches)	6.864	8.614	10.234	13.363
Motor Size (HP)	1/2	1/2	3/4	1
Weight (Lbs.)	98	143	215	495
Blades	8	8	8	8

Table 2-1: Standard Airlock Dimensions

2.8.2 Capacities

SIZE	AVAILABLE RPM					
	9.5	15	23	9.3	16	22
PAV-6	1.46	2.31	3.54	-	-	-
PAV-8	2.85	4.50	6.90	-	-	-
PAV-10	-	-	-	4.93	8.48	11.66
PAV-12	-	-	-	8.83	15.20	20.90

Table 2-2: Airlock Capacities (calculated) in FT^3/MIN

Note: The practical pocket loading for a standard pocket is usually about 80% or less of the numbers in the table.

Example: PAV 8, 15 RPM

Table:4.50 FT3/MIN

Effective 80%: 4.50 x 0 .8 = 3.60 FT3/MIN

2.8.3 Clearances

The rotor has been machined to fit the housing assembly with proper radial and end clearances. These clearances will assure satisfactory operation at temperatures up to 100° F. In cases where the operating temperature is significantly different from the ambient temperature, the measured gap will be larger under ambient conditions because the rotor will expand under high temperature conditions. We recommend calling the Prater Customer Service Department (1-800-323-5735) to secure information about the gap enlargement for higher temperatures. The standard clearances between rotor and airlock housings under "Process Conditions" are shown in Table 2-3 below.

AIRLOCK SIZE	OPERATING CLEARANCE IN/SIDE & IN/TIP
6	0.004 - 0.008
8	0.004 - 0.008
10	0.004 - 0.008
12	0.004 - 0.008

Table 2-3: Airlock Side and Tip Clearances

Section

3

Section 3: Installation

3 . 1 Introduction

Proper installation of **Prater's** BAV Airlock is critical for efficient and productive operation. The proper site preparation and placement of the BAV Airlock and related equipment will insure that the grinder operates safely and to its fullest capacity.

The following are important considerations in BAV Airlock Installations:

Location. Make sure the operating location will provide strong, vibration-free base support and allow easy access to all parts of the BAV Airlock. The BAV Airlock should never be located where it is independently supporting equipment or hoppers above or below it. Additional weight applied to the airlock housing can distort it, possibly causing binding of the rotor. Ideally it should have several feet clearance all around it and sufficient room to service the rotor and housing internal components.

Leveling. The BAV Airlock must be mounted horizontally on a flat surface, which has sufficient strength to prevent deflections of more than 0.003" and be large enough to incorporate the full base of the BAV Airlock. Sections 3.3 and 3.4 explain how to check for proper leveling and prevention of vibration damage during operation.

3.2 Location

There are two essential considerations for the BAV Airlock location: the foundation below the machine and the free clearance around it.

3.2.1 Foundation

The BAV Airlock must be supported in a vibration free location. All BAV Airlocks need a gasket between the mounting surfaces to prevent any leakage of product or air.

3.2.2 Clearance

There should be a sufficient open space in all directions around the BAV Airlock to allow access for maintenance operations.

3.2 Leveling

The base of the unit must be level to prevent vibrations that will accelerate wear. Before tightening fasteners, check for correct unit leveling at the comers of the BAV Airlock.

To correct level:
1. Insert shims for proper alignment
2. Recheck level at corners of the BAV Airlock
3. Once proper level has been achieved, tighten all fasteners.

3.3 Vibration

The BAV Airlock is constructed to run without noticeable vibration. Vibration indicates a problem that must be found and corrected immediately. Left uncorrected, vibration could cause damage to the Airlock or structural damage to connected components.

There are several conditions that cause vibration including:
- Uneven base (See Section 3.2)
- Loose motor fasteners
- Defective motor or BAV Airlock Bearings (See Section 6)
- Other equipment transferring vibration thru contact with the BAV Airlock
- Foreign material in the BAV Airlock

3.4 Drive

The BAV Airlock comes supplied with the proper direct drive motor and reducer to achieve the correct rotor RPM balanced and properly mounted.

3.5 Air Purge Port

Both end seals have an air purge port (1/8" NPT) which can be connected to a compressed airline. If the product is very dusty, a pressurized clean air stream outflow is required to keep the packing clean. In normal atmospheric conditions, a purge pressure of 2-5 PSI is adequate. The purge air loss will be about 1 SCFM. Inert gas can be used in place of air if necessary.

3.6 Electrical Requirements

Install connections to meet all national and local electrical codes. Consult with your local power company before installation.

NOTICE

THE NATIONAL ELECTRICAL CODE REQUIRES A MANUALLY OPERABLE DISCONNECT SWITCH LOCATED WITHIN SIGHT OF THE MOTOR, OR A CONTROLLER DISCONNECTING MEANS CAPABLE OF BEING LOCKED IF NOT WITHIN SIGHT OF THE MOTOR.

Effective October 31, 1989, OSHA requires that all energy disconnect devices be capable of accepting a lock-out/tag-out device. This requirement is mandatory for any new equipment being installed or for replacement, repair, or modification of older equipment. The employer must:

- Produce a written program explaining the procedure.
- Conduct an annual inspection to verify compliance.
- Provide documented employee training in these procedures.

3.6.1 Electrical Interlocking

As a general guide, the last piece of process equipment is started first with subsequent starts working up the line to the Airlock, used as a feeder, being the last item started and the first item stopped. If used as a bin discharge, it should be started first and stopped last.

3.7 Unit Check

After installation is complete, carefully inspect all work before installation crew leaves to see that all instructions have been properly followed.

Section

4

Section 4: Operation

4.1 Introduction

Pre-run inspections and safety checks throughout this section insure that the BAV Airlock is in proper operating condition. Other aspects of operation covered in this section include: start-up and shut down sequences.

DANGER

ELECTRICAL SERVICE TO THE MACHINE MUST BE LOCKED OUT WHILE ANY REPAIRS OR ADJUSTMENTS ARE BEING MADE OR WHILE ANY COVER, DOOR, HATCH OR OTHER PROTECTIVE DEVICE IS NOT IN PLACE.

4.2 Safety Check-Up

Before starting the BAV Airlock check the following:

- ✓ The inside of the Airlock for foreign material, i.e., nuts, bolts, wire.
- ✓ That all guards are mounted and secure.
- ✓ That all inspection doors are closed and secured.
- ✓ That all electrical starting equipment, meters, disconnect switches, and other control devices are clearly visible readily accessible to the operator.
- ✓ Proper Airlock rotation if Airlock has a beveled rotor or air purge.

4.3 Starting Check List

This checklist should be followed during the initial installation and after any shut down period or maintenance procedure.

1. Check inside the BAV Airlock and remove any foreign material that may have accumulated during shipment, installation or maintenance.
2. Check rotor for correct direction of rotation relative to material feeding.

3. Make sure the gearbox lubrication is sufficient.
4. Set up and check compressed air supply if unit is air purged.
5. Make sure no tension from surrounding equipment is placed on airlock housing.
6. The initial start should be without product. Check seal effectiveness and tighten if necessary.
7. Feed material into BAV Airlock while unit is in operation.
8. Do not continue to operate when malfunctions occur or problems arise.

Section

5

Section 5: Maintenance

5.1 Introduction

The BAV Airlock is designed to operate with minimal maintenance. Routine inspections and regular maintenance will identify any worn or broken parts before they become a problem. Worn or broken parts are damaging to the BAV Airlock and its output.

⚠WARNING

DO NOT OPEN THE BAV AIRLOCK OR ATTEMPT ANY FORM OF INSPECTION UNTIL THE AIRLOCK HAS COME TO A COMPLETE STOP AND THE ELECTRICAL DISCONNECT HAS BEEN LOCKED IN THE OPEN POSITION.

5.2 Routine Inspection

Rotating equipment requires regular routine preventative maintenance procedures. Regular inspection of the rotor blades should be carried out particularly where abrasive materials are being processed. Visual inspection will show the necessity for change.

5.3 BAV Rotor Removal

This procedure should be followed during cleaning and servicing procedure of the BAV Airlock.

⚠WARNING

DO NOT OPEN THE BAV AIRLOCK OR ATTEMPT ANY FORM OF INSPECTION UNTIL THE AIRLOCK HAS COME TO A COMPLETE STOP AND THE ELECTRICAL DISCONNECT HAS BEEN LOCKED IN THE OPEN POSITION.

1. Turn off the BAV Airlock and allow rotor (Figure 7.2 - 2) to come to a complete stop.
2. Lock out electrical power to the BAV Airlock.
3. Remove the 6 hand knobs (Figure 7.2 - 11) which secure the end plate (Figure 7.2 - 3) to the housing (Figure 7.2 - 1).

4. Using both hands, firmly pull the rotor and endplate assembly out of the housing (Figure 7.2 - 1) and perform required cleaning or maintenance of the rotor and housing.
5. When maintenance is finished, realign rotor (Figure 7.2 - 2) with stub shaft keyway (Figure 7.2 - 27).
6. Insert rotor into housing and fasten the 6 hand knobs until the endplate is completely seated into the BAV Airlock housing (Figure 7.2 - 1).

5.4 Seal and Bearing Removal

5.4.1 Bearings

The bearings (Figure 7.2 - 10, 12, 24) in the BAV Airlock are lubricated and sealed at the factory, requiring no further lubrication for the life of the Airlock.

5.4.2 Packings

Three rings of square section, molded, split ring self lubrication packing (Figure 7.2 - 18) are provided in each packing seat, followed by an adjustable packing gland (Figure 7.2 - 16). The standard packing used in the BAV Airlock are made of abrasion resistant polyimide but food grade Teflon packing is available for certain applications.

5.4.3 Self Adjusting Packing Gland

Prater BAV Airlocks are equipped with a self-adjusting packing gland. This is a unique feature which maintains constant pressure on the packing as it wears making periodic adjustment of packing pressure unnecessary. The pressure has been set during final assembly and inspection at the factory and should be satisfactory for the life of the packing.

When the packings have completed its useful life, replacement can be made quickly and conveniently by following the simple instructions listed below while referring to Figure 7-3.

⚠WARNING

DO NOT OPEN THE BAV AIRLOCK OR ATTEMPT ANY FORM OF INSPECTION UNTIL THE AIRLOCK HAS COME TO A COMPLETE STOP AND THE ELECTRICAL DISCONNECT HAS BEEN LOCKED IN THE OPEN POSITION.

1. Advance both spring release nuts (Figure 7.3 - 17) along spring release screw (Figure 7.3 - 13) until spring retainers (Figure 7.3 - 15) are disengaged from the packing gland (Figure 7.3 - 16).
2. Slide packing gland (Figure 7.3 - 16) from spring retainers (Figure 7.3 - 15) by rotating it 90°. Slots are provided in the packing gland (Figure 7.3 - 16) to allow this rotation.
3. Slide packing gland (Figure 7.3 - 16) along the rotor shaft towards the bearing (Figure 7.3 - 12) until the packing glad (Figure 7.3 - 16) is free of the end plate (Figure 7.3 - 3).
4. Add new packings (Figure 7.3 - 18) as required.

5. To reassemble the packing gland to its operating position, it may be necessary to further compress springs (Figure 7.3 - 14) by advancing spring release nuts (Figure 7.3 - 17) against spring release retainers (Figure 7.3 - 15) until packing gland (Figure 7.3 - 16) can be re-engaged with the spring retainer (Figure 7.3 - 15).
6. Once this is done, follow the above described procedure in reverse order.

5.4.3 Lantern Rings

Under certain operating conditions, especially when the Airlock is handling abrasive dust, it may be desirable to purge the packing gland with compressed air or inert gas. This is accomplished by installing a lantern ring (Figure 7.2 - 18A) in the glad in place of the inner-most ring of packing (Figure 7.3 - 18), immediately adjacent to the rotor side of each endplate (Figure 7.3 - 3). The ring is so designed as to distribute the air or gas evenly in a thin film around the shaft. Lantern rings are generally made of brass, but in nylon and stainless steel lantern rings are also available.

5.5 Beveled Rotors

The BAV Airlock may be equipped with a rotor having the trailing edges and tips beveled with a 15° relief angle, leaving a 11/16" to 1/8" flat surface. In this instance, it is important that the rotation of the rotor be in such a manner so that the square edge of the rotor leads, and the beveled edge trails. On all units the correct rotor rotation will be marked at the factory with rotation arrows to indicate proper rotor rotation.

Section

6

Section 6: Troubleshooting

6.1 Introduction

This section is offered as a general guide to analyze problems. If after reviewing this section you have not identified your problem, contact Prater Customer Service Department at 1-800-323-5735 for further assistance.

6.2 Start-Up Problems

Prater equipment is made of high quality materials and assembled by skilled workers who take pride in their work. However, even on the best equipment there can still be start-up or operational problems. If trouble occurs, please check the following:

⚠WARNING

DO NOT OPEN THE BAV AIRLOCK OR ATTEMPT ANY FORM OF INSPECTION UNTIL THE AIRLOCK HAS COME TO A COMPLETE STOP AND THE ELECTRICAL DISCONNECT HAS BEEN LOCKED IN THE OPEN POSITION.

1. Check the power source for sufficient power as specified on the nameplate. Check the wiring connections and the motor protection devices, i.e. fuses, circuit breakers and overload elements. Replace fuses if blown and reset the circuit breakers or overload elements if tripped.
2. The motor may be burned out. If it is, it will need to be repaired or replaced.
3. The gears in the gearbox may have seized up due to a lack of oil. Replace the gears or the gearbox.
4. Check for jamming of the rotor. If jammed, the airlock may need to be disassembled and cleaned. Do not attempt this until the unit has been locked out.
5. The bearings or seals may need to be replaced.

6.3 Unusual Drive Motor Noise

If the Airlock drive is making an unusual noise during operation, check the following:

1. Check the oil level in the gearbox. If it needs to be filled see the Appendix in the rear of this manual.

6.4 Unusual Airlock Noise

If an unusual noise is heard during the operation of the Airlock, check the following:

1. Check the motors amp draw to determine whether material build-up on the rotor or housing is overloading the motor. If the build-up is excessive, clean the rotor and housing after locking out the unit.

2. Check for the correct direction of rotation. A rotor with beveled tips rotating in the wrong direction will cause material build-up.

3. Some materials are susceptible to build-up and may cause a squealing noise as the rotor turns. This will be normal for some types of material and should not be a cause for concern if it does not cause a motor overload or damage the rotor.

4. The rotor may be rubbing on the housing. Check for external loads on the inlet and outlet flanges. The airlock is not to be used as a support for loads other than the drive assembly and line adapter.

6.5 High Temperature

Motors operating under rated load (amp draw) and ambient conditions, as specified on the nameplate, may feel warm when touched. If overheating is suspected, check the following:

1. Check for proper operating of the feeder bearings. See section 6.6.

2. Check for excessive material build-up in the rotor. See section 6.4.

3. Verify that the electrical overload elements are properly sized per the full load amp specification on the motor nameplate. Oversized elements will not protect the motor from overload.

4. Check for proper ventilation around the motor. Material or dust build-up on the exterior of the motor may hamper ventilation.

5. Check the oil level in the gear case. If it needs to be filled, see the Appendix in the rear of this manual.

6.6 Airlock Bearing Malfunction or Failure

Disassemble the bearing(s) from the Airlock and check the following:

1. Check for wear, dirt or material in the bearings. If there is damage, replace the bearings.

6.7 Leaking Air Purge Seals

If air loss from the air purge seals are noticed, check the following:

1. Check to insure that a compressed air supply has been installed to the Airlock. Never operate and Airlock that has air purge seals without purge air. If the Airlock has been operated without the air purge operating, the seals could be damaged and need to be replaced.

2. Check for proper operation and adjustment. The air should be set 3-5 PSI above the conveying system operation pressure. If the air is set too low, material will not be properly cleaned from the air purge diffusers and will damage the seals. The seals should be replaced.

6.8 Leaking Packing Seals

If air or material is noticed leaking from the packing seals, the packing may be worn or damaged. Remove and replace the seals.

6.9 Air Loss

If air loss is noticed coming from the Airlock, check the following:

1. Check for the correct rotor-to-housing and rotor-to-endplate clearance. If there is too much clearance, air loss though the clearances will result.

2. Check the condition of the seals. See section 6.7 and 6.8.

6.10 Material Not Flowing

If material is having difficulty flowing into or out of the Airlock, check the following:

1. Check for material build-up in the rotor pockets. Clean the Airlock rotor after the unit has been locked out.

2. Check for correct rotor-to-housing and rotor-to-endplate clearance. If there is too much clearance, air loss through the clearances may cause the material to bridge above the Airlock decreasing the material flow.

3. Vented shear protectors are designed to minimize the changes for material bridging above the Airlock by venting the displaced air from each pocket as it fills, as well as any air leakage through the clearances. A vented shear protector may need to be installed for your application. If a vented shear protector is installed, check the condition of the long seal flap. If it is worn or sheared off due to incorrect installation or incorrect rotor rotation, it will need to be replaced.

4. Check for the correct Airlock RPM.

5. Check for the correct rotor rotation.

Section

7

Section 7: Drawings and Parts List

The following figures and illustrations are provided to assist in the operation and maintenance of Prater BAV Airlocks as well as a general reference for any spare or replacement parts for Prater BAV Airlocks. For specific BAV Airlock questions please contact Prater Customer Service.

SECTION 7.1: BAV PARTS LIST
(REFER TO SECTION 7.2 EXPLODED VIEW)

PART NO.	DESCRIPTION
1.	AIRLOCK HOUSING
2.	ROTOR
3.	OPERATOR SIDE END PLATE
4.	RAIL SUPPORT PLATE
5.	BEARING BLOCK EXTENSION
6.	BEARING COVER
7.	BUTTON HEAD SCREW
8.	SET SCREW
9.	SOCKET HEAD SCREW
10.	BEARING W/ LOCKING COLLAR
11.	QUICK RELEASE HANDLE
12.	BEARING
13.	PACKING GLAND SET SCREW
14.	SPRING
15.	SPRING RETAINER
16.	PACKING GLAND*
17.	LOCK NUT
18.	PACKING*
18A.	LANTERN RING* (OPTIONAL)
19.	LINEAR BEARING
20.	LINEAR BEARING BLOCK
21.	FLAT WASHER
22.	LOCK WASHER
23.	HEX SCREW
24.	BEARING W/ LOCKING COLLAR
25.	LINEAR RAIL
26.	REDUCER MOUNTING PLATE
27.	ROTOR STUB SHAFT
28.	MOTOR/ REDUCER DRIVE
29.	RAIL HOLD DOWN PLATE
30.	DRIVE SIDE END PLATE

(*) SPECIFY MATERIAL WHEN ORDERING

SECTION 7.2: BAV EXPLODED VIEW

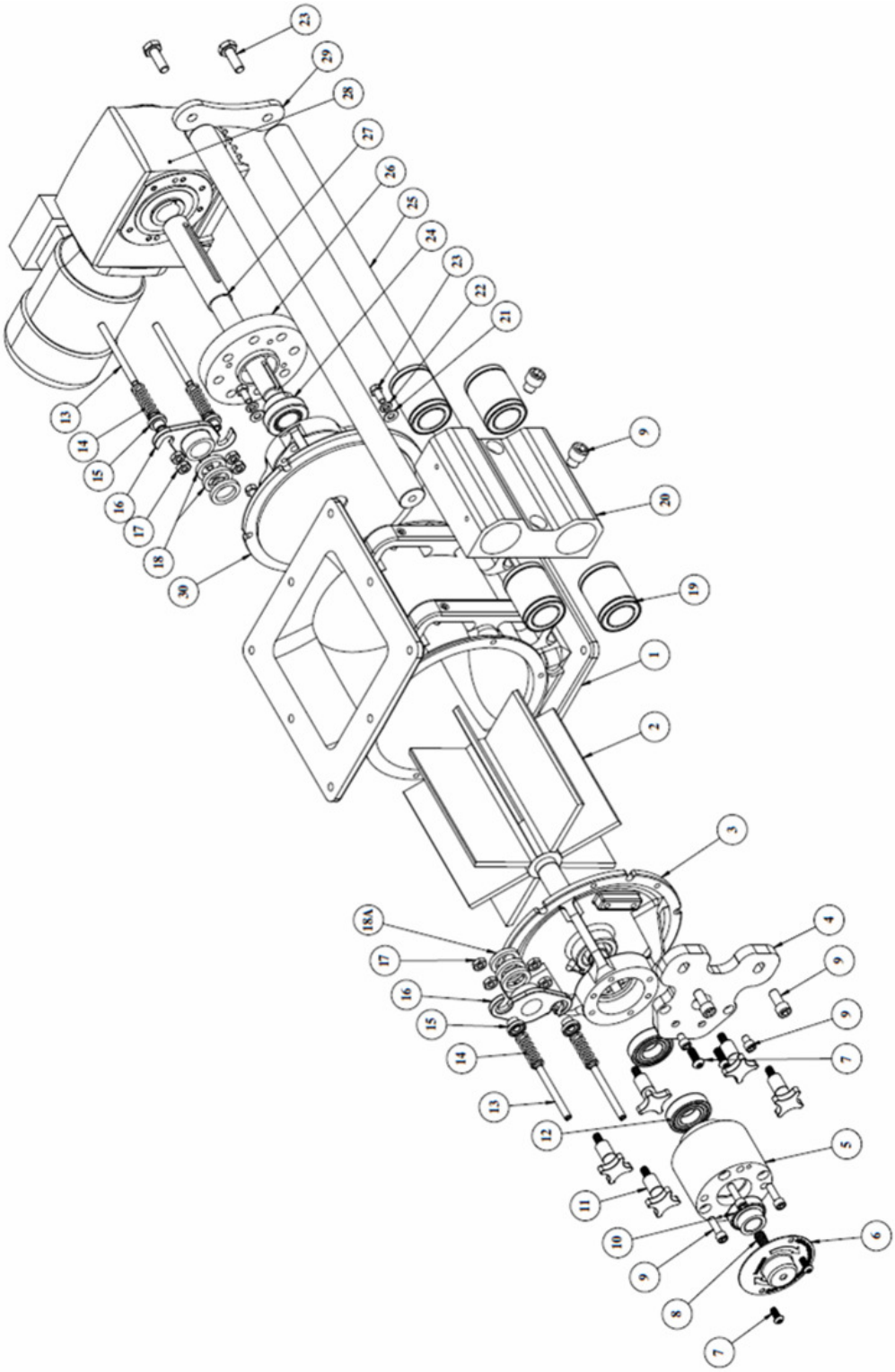

SECTION 7.3: BAV SECTION VIEW

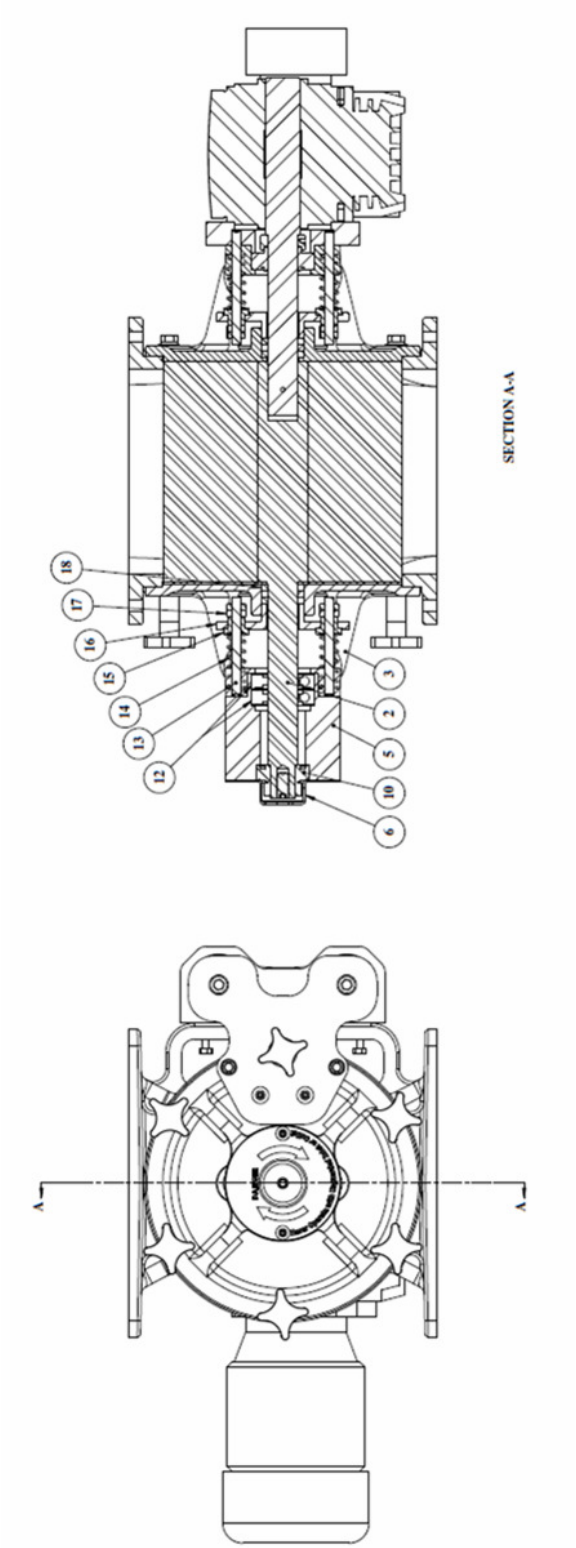

SECTION 7.4: SELF ADJUSTING PACKING PARTS LIST
(REFER TO SECTION 7.3: BAV SECTION VIEW)

PART NO.	DESCRIPTION
2.	ROTOR
3.	OPERATOR SIDE END PLATE
5.	BEARING EXTENSION BLOCK
6.	END CAP
10.	BEARING W/ LOCKING COLLAR
12.	BEARING
13.	PACKING GLAND SET SCREW
14.	SPRING
15.	SPRING RETAINER
16.	PACKING GLAND*
17.	LOCK NUT
18.	PACKING*

(*) SPECIFY MATERIAL WHEN ORDERING

Appendix A: Gearmotor Maintenance and Lubrication

Gear reducers are designed with a steel worm, cut integral on input shaft, mating with a bronze worm gear. The combination gearmotor and separate reducer are designed with a steel worm, cut integral on the input shaft, mating with a bronze worm gear as the first stage. The second state gears are helical, cut from steel, hardened and then honed to close tolerances.

The single reduction and combination gearmotor and separate reducer are designed with tapered roller bearings on the input, intermediate and final output shaft.

Mountings

Before servicing the gearmotor, check diagrams on tags supplied to see that oil level plug is installed in proper location and oil level is correct for position in which gearmotor is to operate.

If any change is necessary, the vent plug will also have to be located above the new oil level.

Rotation

To reverse the direction of rotation of a 3 phase A-C Gearmotor, interchange any two of the lines going to the motor. If it is a 2 phase gearmotor, interchange the wires of one phase. Four wire, 2 phase gearmotors have lead marking conforming NEMA Standards.

D-C Gearmotors may be reversed by interchanging the armature leads. In all cases connection diagrams are furnished with the motors.

Lubrication and Maintenance Information

Lubrication is extremely important for satisfactory operation of gearhead motors, therefore proper oil level must be maintained in the gear case at all times. Oil levels are indicated by red head plugs.

The satisfactory performance of gears and bearings in gear motors and reducers depends on clean lubricant, free from dust, grit, sludge and moisture. Depending on operation conditions, the lubricant will eventually become contaminated and should be drained periodically.

When first put into operation, the lubricant in a new case becomes contaminated with a grit and metal particles unavoidably left in the unit as a result of machining and from tooth surfaces during run-in periods.

A run-in period of about one (1) week operation should be sufficient before the original lubricant is drained and new lubricant of recommended viscosity group installed.

During operation, the oil level should be periodically checked. With oil level too high, excessive churning occurs and this causes overheating and rapid deterioration of the lubricant. With oil level too low, excessive friction in bearings and on gear teeth may result.

Gears must breathe as operating temperatures increase or decrease. Where surrounding atmosphere is humid, this breathing action results in condensation of moisture inside the gear case. This can cause rusting of metal surfaces, and sludging of oil may follow. In such cases, attention should be given to the ventilation of both inside and outside of the gear case and to more frequent changing of the lubricant.

It is impossible to select one gear lubricant of petroleum origin which is usable over a wide range of temperatures such as is required for some installations. When such conditions are encountered it is necessary to change lubricants depending upon the ambient (surrounding air) temperatures at the time of motor operation. Use lubricants of the proper type, as required by the ambient temperature in which the motor will operate.

Standard grease types:

- Shell Alvania #2
- Mobil Temp #1

Drain arid flush gear case after each 1500 hours of normal operation, or at least every 6 months. If operated outdoors, lubricant changes should be made seasonally, using the proper grade for the temperature range the Airlock will be operated in. If operated continuously, drain and flush after each 500 hours of operation.