PRATER INDUSTRIES
Evolution Hammer Mill Operation and Maintenance Manual

PRATER INDUSTRIES

Evolution Hammer Mill Operation and Maintenance Manual

---

2 Sammons Court.
Bolingbrook, IL 60440
Phone 630-759-9595 • Fax 630-759-6099

Table of Contents

Section 1: Safety

1.1 Safety Rules

Safety must be considered through all facets of operation and maintenance on any mechanical device. Using proper tools and methods will help prevent accidents and serious injury to you and your fellow workers.

Proper operating procedures and safety precautions are listed throughout this manual. Study them carefully and follow instructions; insist that those working with you do the same. Most accidents are caused by someone's carelessness or negligence.

Examples of the four types of safety notices (Danger, Warning, Caution and Notices) in this manual are listed below:

DANGER	**DANGER: INDICATES AN IMMINENTLY HAZARDOUS SITUATION IN, WHICH PERSONAL INJURY OR DEATH MAY OCCUR.**
WARNING	**WARNING: INDICATES A POTENTIALLY HAZARDOUS SITUATION IN, WHICH PERSONAL INJURY OR DEATH MAY OCCUR.**
CAUTION	**CAUTION: INDICATES A SITUATION WHERE DAMAGE TO THE EQUIPMENT COULD RESULT.**
NOTICE	**PROVIDES HELPFUL INFORMATION FOR PROPER OPERATION OF THE EVOLUTION MILL**

1.2 Safety Precautions

WARNING	**OPERATORS MUST BE INSTRUCTED NOT TO PUT HANDS, FINGERS OR OTHER FOREIGN OBJECTS IN THE MACHINE, AND NOT TO REMOVE ANY COVER, DOOR, HATCH OR OTHER PROTECTIVE DEVICES PLACED ON THIS MACHINE FOR THE SAFETY OF THE OPERATOR. ANY ATTEMPT TO DEFEAT THESE DEVICES COULD RESULT IN SERIOUS INJURY.**

DANGER

ELECTRICAL SERVICE TO THE MACHINE MUST BE LOCKED OUT WHILE ANY REPAIRS OR ADJUSTMENTS ARE BEING MADE OR WHILE ANY COVER, DOOR, HATCH OR OTHER PROTECTIVE DEVICE IS NOT IN PLACE.

DANGER

WHEN PROCESSING MATERIALS THAT MAY REACT TO A SPARK CAUSED BY METAL HITTING METAL OR STONES, ETC., THE USE OF A MILL DUST COLLECTOR EQUIPPED WITH AN EXPLOSION VENT IS STRONGLY RECOMMENDED. SEE APPENDIX G FOR MORE INFORMATION ABOUT EXPLOSION VENTING.

The precautions listed in this manual may not be all inclusive and others might exist, that are specific to your operation or industry. In addition, nearly all employers are now subject to the Federal Occupational Safety and Health Act of 1970, as amended, which require that an employer be kept abreast of regulations, which will continue to be issued under its authority.

The Evolution Hammermill must always be operated in accordance with the instructions and precautions in this manual and on the caution plates attached to the equipment. Only workers completely familiar with the instructions and precautions in this manual should be permitted to operate the unit. The operators should thoroughly understand these instructions and precautions before attempting to operate this equipment.

Illustration 1-1 is a checklist of safety precautions and proper operating procedures. Failure to observe and follow the precautions may result in serious personal injury or property damage.

Safety Checklist

ALWAYS operate the Hammermill in accordance with the instructions in this manual.

DO NOT open inspection doors while unit is in motion.

NEVER work on unit and related components unless electric power and motor drive have been locked out and tagged. The National Electrical Code requires a manually operable disconnect switch located within sight of the motor, or a controller disconnecting means capable of being locked if not within sight of the motor.

DO NOT use the Hammermill for processing of material other than the specific application for which it was designed.

AVOID poking or prodding into unit openings with bar or stick.

ALWAYS have a clear view of unit loading and unloading points and all safety devices.

KEEP area around unit, drive and control station free of debris and obstacles.

NEVER operate unit without guards and all safety devices in position and functioning.

ALWAYS allow unit to stop naturally. DO NOT attempt to artificially brake or slow motion of unit.

NEVER put your hand near or in the inlet or outlet of the Hammermill while it is operating or stalled.

Illustration 1-1: Prater Hammermill **Safety Check List**

1.3 Evolution Hammermill Safety Labels

Figure 1-2 shows the safety labels used on the Hammermill. These labels are important for worker information and must not be removed from the unit.

Figure 1-2: Hammermill Safety Labels

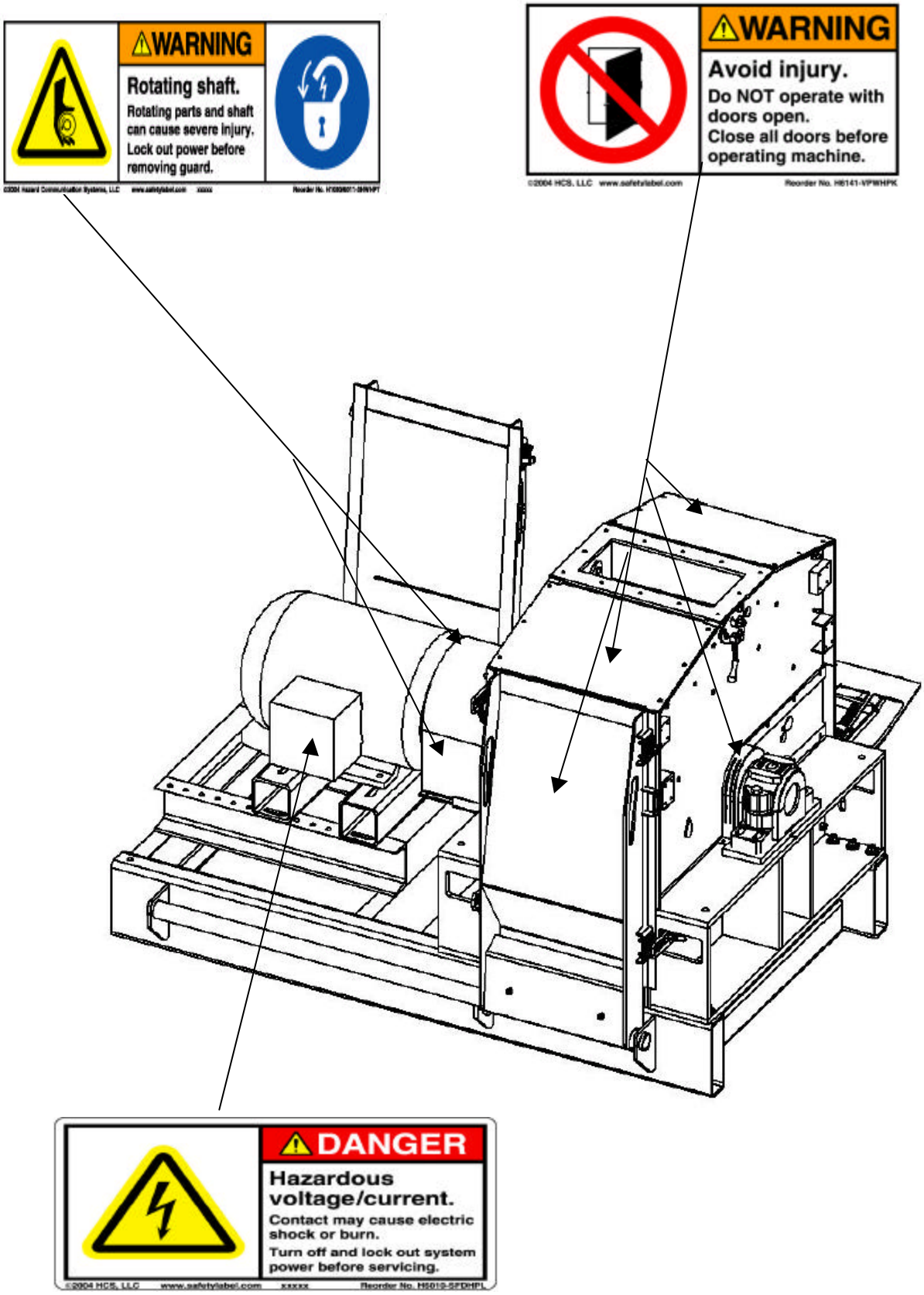

Figure 1-3: Evolution Hammermill Safety Label Placement

Section 2: Introduction

This section provides an overview of the manual and indicates safety procedures to be followed when installing and operating the Hammermill.

2.1 Manual Overview

This manual describes the installation requirements, operational procedures, and routine maintenance of Prater's Evolution Hammermill, Model #'s 4022, 4032, 4042, 4050, 4064, 4522, 4532, 4542, 4550, 4564, 5422, 5432, 5442, 5450, and 5464. Since each Evolution Hammermill is engineered for a specific application, there may be unique features in your particular machine that are not covered in this manual. Refer to this manual before beginning, and during installation. Keep the manual available for future reference. Reliable operation, personnel safety, and long service life of this equipment depend on three important considerations:

- The care exercised during installation.
- The quality and frequency of maintenance and periodic inspections.
- A common sense approach to its operation.

To keep operating costs down and profits up, carefully follow the instructions listed for installation, operation, safety, and maintenance.

2.2 Receiving the Unit

When your shipment arrives, thoroughly inspect the mill and all related equipment. In the event of shipping damage, note the problem on the bill of lading or freight bill and make sure you obtain the driver's signature for possible claim against the delivering carrier.

NOTICE . It is the receiver's obligation to file claims for shipping damage

2.3 Before Installation

Be sure the installation crew or millwrights are aware of installation requirements. If they have any questions or are unsure of proper procedures, clarify the matter to avoid improper installation. Section 3 of this manual covers important steps to ensure safe, vibration-free installation. Personnel responsible for installation should be familiar with these procedures.

In preparing for installation, make sure you provide for all appropriate safety devices. It is your responsibility to provide lockout switches, guards, and other safety deices and safety procedures to protect the machine operator or maintenance personnel.

2.4 Before Operation

Make sure operation personnel are well trained in procedures for operating and maintaining the Hammermill. In particular, make sure they understand the essential safety precautions described in Section 1.6.

2.5 Operating Principles

Figure 2-1 illustrates the basic operating principle of the Prater Evolution Hammermill. The Evolution mill uses a shaped grinding chamber with distinct grind and release zones. Coarse material is fed to the mill through the top product inlet usually by a gravity rotary feeder. The high-speed rotary action of the hammers impacts and accelerates the material into an enhanced pre-grind chamber. A sharp radius pre-grind plate is used to pre-grind incoming material down to a smaller more uniform size, generating an even feed into the grinding chamber. The material then enters the shaped grinding chamber, which uses backing plates along with the screens to optimize particle retention time. As material moves toward the 3 o'clock position the shaped chamber reduces the clearance between the screen and the hammers to accelerate particle reduction.

At the 3 o'clock position the shaped chamber rapidly opens to double the hammer to screen clearance, allowing sized particles to escape rotation and exit the screen. The finished product is collected in a hopper underneath the mill. Either a mechanical conveying system or a pneumatic system can be utilized to remove the ground material. In either case, it is critical that the finished material be removed from the

mill faster than it is being produced. At the 6 o'clock position material that has not been ground fine enough to exit the screen is decelerated by the Rota-Break, allowing more intense grinding due to the induced speed differential.

After the Rota-Break the backside of the grinding chamber mirrors the front side, allowing more intensive grinding as the material moves back toward the inlet diverter. Material that does not pass through the backside screen is intensely ground against the backside Pre-grind plate.

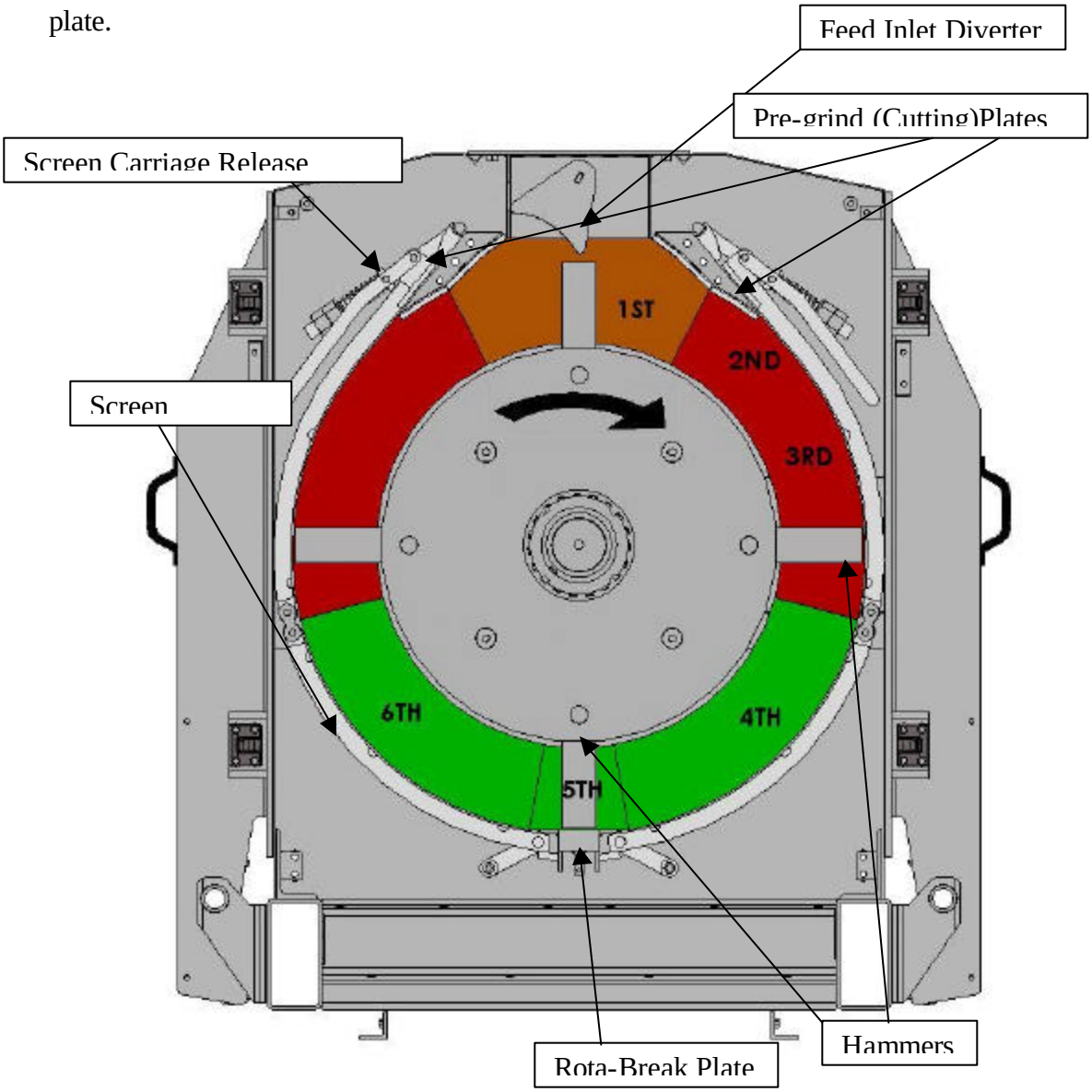

Figure 2-1: Evolution Hammermill Operating Principle

2.6 Custom Applications

Prater Evolution Hammermill's are used for a wide range of industrial and agricultural applications. A variety of hammers, screens, and other grinding elements such as specialized aluminum backing sheets are available to meet virtually any grinding need. Please contact Prater Industries to discuss your custom application needs.

Section 3: Installation

This section covers installation procedures to insure safe and efficient operation of the mill.

3.1 Introduction

Proper installation of the Prater Evolution Hammermill is critical for efficient and productive operation of the mill. The proper site preparation and placement of the mill and related equipment will insure that the mill operates safely and to its fullest capacity.

The following are important considerations in Evolution Mill installation:

1.) **Location:** Make sure the operating location will provide rigid, vibration free base support and allow for easy access to all parts of the Hammermill. **See Section 3.2.**

2.) **Leveling:** The Hammermill must be level and must operate without vibration. Sections 3.3 and 3.4 explain how to check for proper leveling and preventing vibration damage during operation.

3.) **Debris Collection:** you must remove foreign matter from the incoming product flow. **See Section 3.5.**

4.) **Air System:** Efficient Hammermill operation requires separation of the finished product from the airflow created by the normal grinding process. The method of separation is determined by the type of take-away system used in an installation and, to lesser degrees, the type of product and the fineness of the grind. **See Section 3.7.**

3.2 Location

The size and weight of the Prater Evolution Hammermill make the location and proper support of the mill extremely important for both the operation of the mill and the safety of employees.

There are two essential considerations for the Hammermill location: the foundation below the machine and the clearance around the equipment.

3.2.1 Foundation

The Hammer mill must be placed in a vibration free location and supported by:

- Reinforced steel concrete foundation
- Adequate structural support under floor of unit to prevent oscillation
- Heavy cross bracing if on an elevated steel structure.

3.2.2 Clearance

There should be sufficient open space in all directions around the mill to allow access for changing screens and other general maintenance operations. No equipment should be resting on or supported by the mill.

3.3 Leveling

The base of the unit must be level and uniformly supported to prevent the following potentially damaging conditions:

- Misalignment of the coupling, mill and motor
- Bending of the rotor shaft
- Bending or twisting of the mill housing or base

Any of these conditions can produce vibrations that will accelerate wear on the hammers and screens and cause possible damage to the mill.

Check for correct unit leveling at the machined surface of both bearing support members of the mill before and after tightening the base fasteners. See Figure 3-1.

To correct leveling:

1.) Insert shims for proper alignment.
2.) Re-check level at both bearing support members and corners of mill.
3.) Fill all gaps between the base of unit and floor with grout.

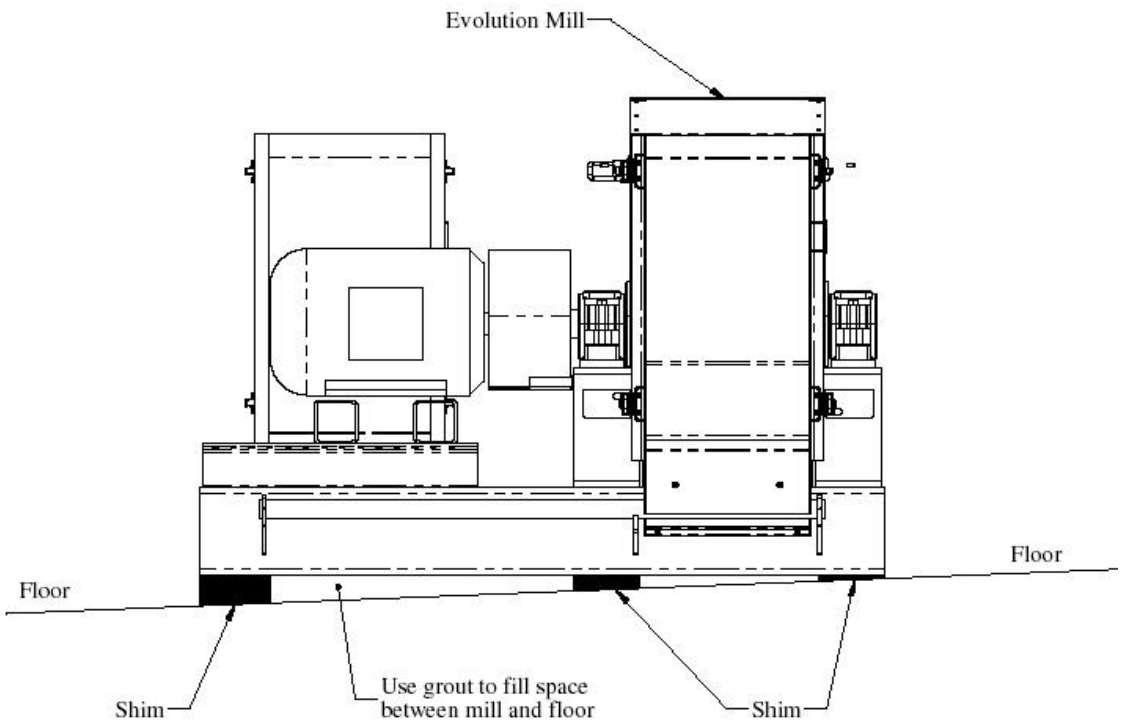

Figure 3-1: Shimming and leveling the mill

CAUTION

ALWAYS use proper support and cross bracing when raising the base of the unit for any reason. This may prevent bowing, bending, or dropping of the unit.

3.4 Vibration

The Prater Evolution Hammermill rotor is balanced to run without noticeable vibration. Vibration indicates a problem that must be found and corrected immediately. Left uncorrected, vibration will cause the following:

- Mill and bearing damage
- Motor damage
- Structural damage

There are several conditions that cause vibration, including:

- Uneven base. **See Section 3.2-3.4.**
- Base not contacting floor at all points. **See Section 3.2-3.4.**
- Mill and motor improperly aligned. **See Section 5**
- Loose motor fasteners.
- Defective motor or mill bearings. **See Section 5.**
- Other equipment transferring vibration through contact with the mill. **See Section 2.2.**
- Worn, missing, or broken hammers. **See Section 5.4.**
- Deviation from recommended balanced hammer setup. **See Section 5.4.**
- Material build-up on rotor
- Foreign material in grinding chamber. **See Section 3.5.**

3.5 Foreign Material

A collection system serves to stop foreign elements from entering the grinding chamber. Damage (broken hammers, punctured screens, etc.) will result if foreign material gets into the grinding chamber. Foreign material entering the grinding chamber may not exit through the screens; such items will have to be extracted by hand after the mill has come to a complete stop.

3.5.1 Magnet

A magnet will catch most ferrous material. The magnet may be built into the inlet, but for maximum protection, and additional, easily cleanable, magnet should be incorporated into the system prior to the mill. To insure against damage, take every precaution to keep foreign materials out of the grinding chamber.

A clean magnet will catch mild steel metal debris that may cause fires or damage to:

- Hammers
- Screens
- Grinding chamber

Removing debris is important for the magnet to perform to its fullest. When installing the mill, leave adequate access to the magnet for easy cleaning.

If a self-cleaning magnet is supplied with the mill, it has to be made sure that the mill is stopped before the magnets are cleaned. This step helps to maintain safety and prevent metal from falling into the rotating elements.

3.5.2 Additional Separation

If other foreign materials that a magnet will not catch, such as glass, aluminum, rocks, etc. are contained in the product feed, additional separation methods are needed to maintain suitable screen, hammer, and rotor life.

Leave adequate space to access the material collection system when installing the mill. **See Section 3.2.**

Remove debris from the collection system before starting the mill to prevent plugging the screens. A plugged screen will lower capacity as well as reduce the effectiveness of the collection system.

3.6 Inlet and Discharge Isolation

The inlet and outlet connections should be separated from the body of the mill. Use a soft rubber gasket or other pliable material to isolate the inlet and discharge area of the mill from the feeding and discharge chute or hopper.

Separate the inlet and outlet sections from the body of the mill with a minimum metal-to-metal separation of ¼ inch.

3.7 Air Relief

Allow a sufficient amount of unrestricted air to enter and exit the Hammermill to achieve maximum capacity. If the air supply is choked or excessive both the grind and efficiency of the mill will be lost. Because of numerous variables in product characteristics, desired grind, and required capacities, we strongly recommend contacting Prater Application Engineering for proper air relief requirements through the Hammermill.

Vent or set up the following with an air relief system that allows for proper airflow:

- Feed inlet (if the spouting or feeding device is built to prevent or restrict airflow)
- Bins
- Conveyors
- Bucket elevators

⚠WARNING

ALWAYS provide sufficient air relief. Inadequate air relief will cause the machine to release dust into the surrounding atmosphere. Dust suspended in the air can be highly explosive and personally hazardous. If inhaled over long periods of time, this dust can cause serious respiratory or internal disorders.

To prevent the release of dust into the atmosphere surrounding the mill, maintain proper negative air relief and a good dust collection system. Consult your products MSDS profile for specific health and environmental issues.

3.7.1 Air Relief Setups

Airflow generated by the spinning rotor of the hammermill and air passing through the mill must be relieved. Air relief techniques differ between mechanical conveying systems and dilute phase pneumatic conveying systems. The systems shown here are only to remove this generated air pressure, NOT for air conveyance of the finished product.

Pneumatic System:

This system is the most common used for the Evolution Mill. It utilizes an air swept Air Pick Up Base (APUB) to pneumatically convey the ground material to a cyclone or filter receiver. Figure 3-3 shows a typical layout of the Evolution Mill Installed with a pneumatic conveying system.

Mechanical System:

It utilizes gravity discharge from the mill and a screw conveyor or bucket elevator as the mechanical transfer device. Even with this system, there must be a sufficient volume of air going through the mill to aid the passing of material through the screens.

For milling dusty materials or for tip speeds in the range of 19,000 FPM and up, Prater recommends an air relief system mounted on a plenum (expansion) chamber built over the discharge conveyor. See Figure 3-4 for a typical mechanical installation.

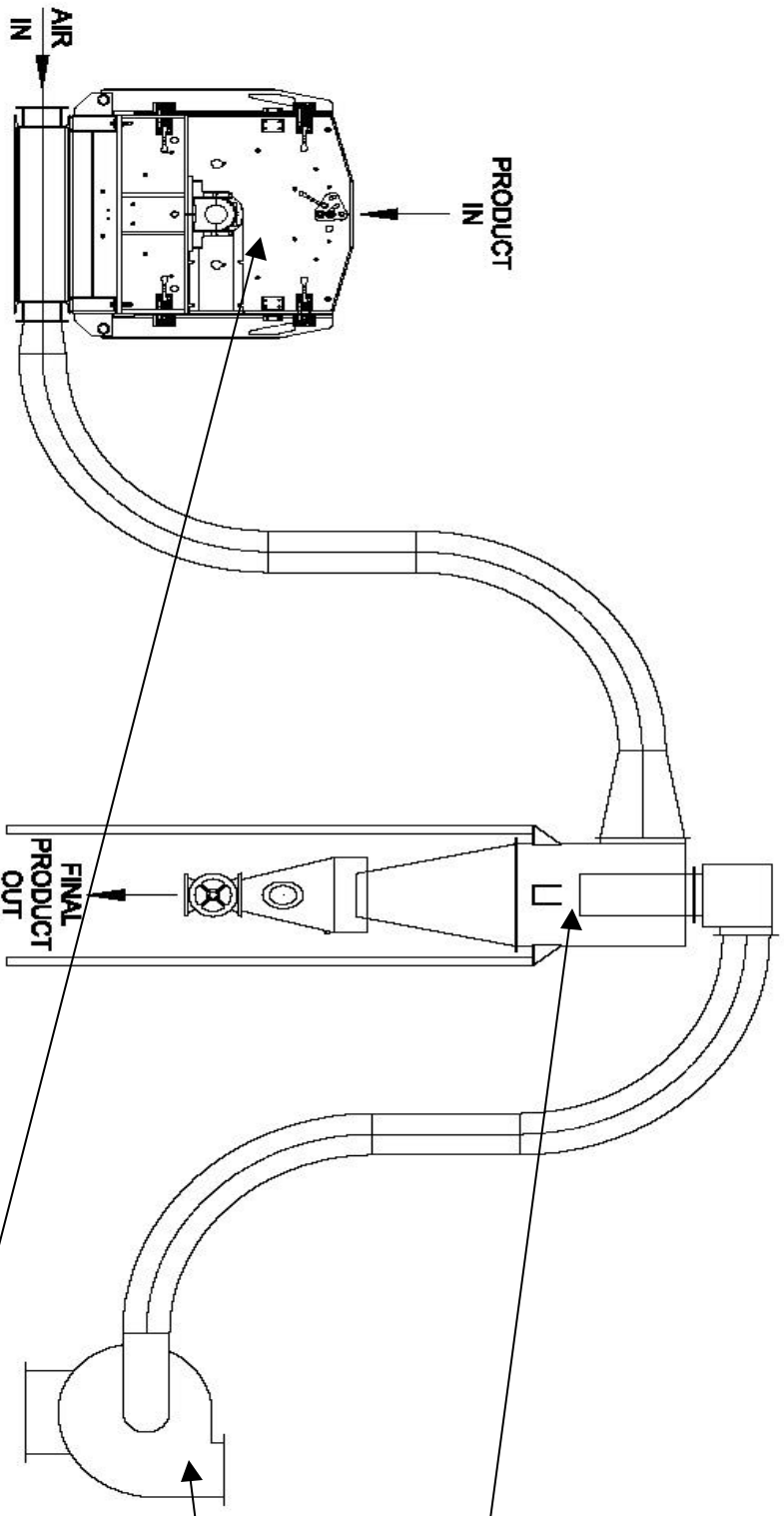

Evolution Mill System Fan Dust Collector

Figure 3-3: Pneumatic Conveying Hammermill Installation

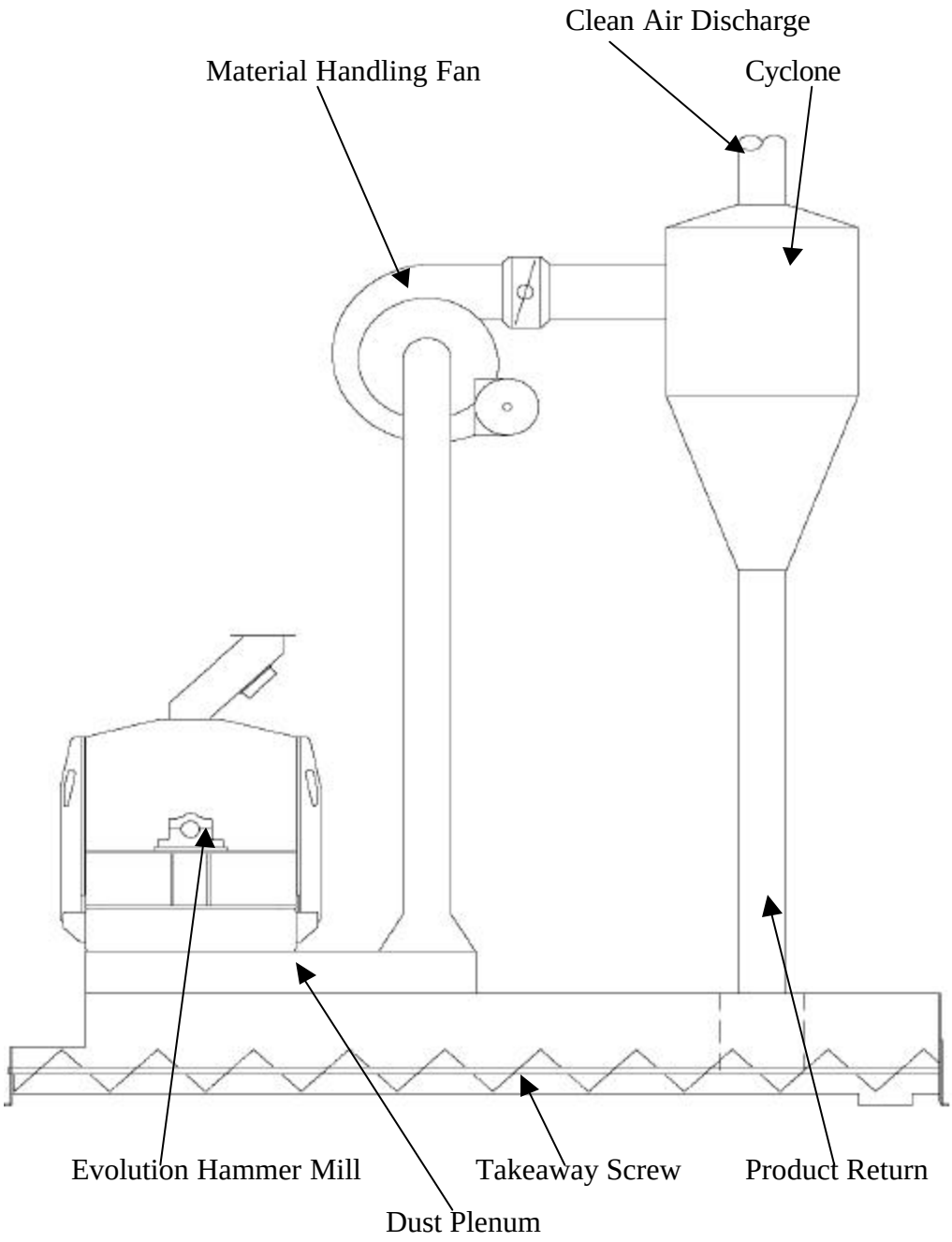

Figure 3-4: Mechanical Conveying Hammermill Installation

3.8 Air Flow

The production efficiency of the Hammermill depends upon two interrelated factors: the speed of rotation and the amount of airflow. You must establish the airflow requirements with the milling rotor running but without product feed. Maintain the airflow constant at the volume stated in machine specifications during all normal operating conditions.

The speed of the mill rotor and the selected screen assembly will determine the fineness of the product leaving the machine. It is critical for product quality that all air supplies and conveying streams consist of clean dry air.

3.8.1 Air Volume Checks

To allow frequent, accurate checks of airflow, mount permanent measuring devices in the clean air portion of the system. At least one measuring device should be within the clean discharge air stream or between the dust collector and main blower.

Obtaining accurate readings on airflow depends upon choosing the right check point. Select a checkpoint that is two to three feet away from bends, inlets, outlets, valves, or other obstacles in ductwork. Pitot tube readings should be taken near the center of ducts, away from turbulent flow along the sides.
Daily checks of the air readings ensure a safe performance of the system. Checks are also necessary if:

- Feed product is changed
- Rotor speeds are changed
- Screen assembly is changed
- The system is started after a long shut down

A permanently mounted pitot in a clean-air duct is a common method used to check the velocity pressure of air passing through a pipe. Appendix B of this manual outlines a measuring device using a simple U-shaped glass/plastic tube filled with water and marked with inch scales, usually in 1/10” gradients to allow direct

pressure readings in water column inches. The Appendix also contains a conversion table listing air volumes for various pressure readings and duct diameters. The Appendix also contains the recommended air volumes for each size E-Mill.

3.9 Feeding

A uniform constant feeding process is essential for best performance. Therefore the use of a volumetric feeder is recommended, if not fed by gravity only.

A negative air system requires a greater volume of air than a mechanical system. The amount of air necessary is determined by the requirements of the air conveying system plus the air relief on the mill itself. The dust control apparatus of the negative air system will handle any dust created during the grinding process.

3.10 Electrical Requirements

Install connections to meet all national and local electrical codes. Consult with your local power company before installation.

NOTICE

The National Electrical Code requires a manually operable disconnect switch located within sight of the motor, or a controller disconnection means capable of being locked if not within sight of the motor.

Effective October 31, 1989, OSHA requires that all energy disconnect devices be capable of accepting a lock-out/tag-out device. This requirement is mandatory for any new equipment being installed or for replacement, repair or modification of older equipment. The employer must:

- Produce a written program explaining the procedure
- Conduct an annual inspection to verify compliance
- Provide documented employee training in these procedures

The Prater Evolution Mill may be started “across the line” if such a procedure is acceptable to your local power company. In order to limit overload on the power supply, larger motors may require reduced voltage starters to “soft start” motors in many areas.

3.10.1 Electrical Interlocking

As a general guide, the last piece of process equipment is started first with subsequent starts working up to the mill.

CAUTION	A time delay is always required between start-up of the mill and start up of the feeder, to allow the mill to reach full operating speed before product is introduced.

Section 4: Evolution Mill Operation

This section describes machine operation and procedures to follow before starting the mill.

4.1 Introduction

Pre-run inspections and safety checks throughout operation insure that the mill is in proper operating condition. Other aspects of operation covered in this section include: start-up and shutdown sequencing, motor rotation, and the inlet diverter.

4.2 Pre-Run Inspection

Before starting the Mill, check the following:

- The inside of the mill for foreign material, i.e., nuts, bolts, wire, etc
- The magnet or other collection device for any accumulation of debris
- The couplings for proper alignment, **See Section 5.8**
- The inspection doors to see that they are closed and properly secured.

- The electrical starting equipment, meters, disconnect switches, and other control devices to insure that they are clearly visible and readily accessible
- The guards to see that they are properly mounted

4.3 Start-up Sequence

This start-up sequence is intended as a general guide. The start-up sequence you use will depend on your specific operation and any unique characteristics of your installation.

As a general guide to electrical interlocking, you turn on equipment in reverse order from product flow. The fan providing airflow is usually started first followed by outlet equipment, the Mill, and the input equipment. The device that feeds product into the system will be the last piece of equipment to be started.

CAUTION	ALWAYS have a time delay between start-up of the mill and start-up of the feeder to allow the mill to reach full operating speed before product is introduced.

Following is a start-up checklist:

1.) Start each piece of equipment, beginning with the fan and excluding the feeder.
2.) Check each motor as it starts for proper rotation and proper amperage.
3.) Check interlocks to make sure they are working and in the proper sequence.
4.) After all the equipment except the feeder has been started, check for proper airflow and pressure readings. **See Section 3.8.**

After all equipment is running properly and correct airflow is achieved, continue the start-up sequence

5.) Begin product feed into the system at a low rate (always less than 50% of full rated capacity).
6.) Check product for desired fineness.
7.) Slowly increase feed to its maximum load condition (amperage). The maximum load for your motor can be found on the motor nameplate. Use the amperage listed for the voltage you are using.
8.) Recheck the fineness of the material and the capacity after reaching the maximum load condition.

CAUTION

NEVER exceed the full load amp reading on your motor nameplate

NOTICE

Under some circumstances, full load amperage may not always be attained. Due to the nature of some products, screen plugging may occur before full load conditions are reached.

WARNING

NEVER open the mill or attempt any form of inspection until the mill has come to a complete stop and the electrical disconnect has been locked into the open position

4.4 Shut-Down Sequence

For a typical Evolution Mill operation, the shutdown sequence will simply be the reverse of the start-up sequence. Check that you do not have special considerations in your installation that require different procedures. Here is the typical shutdown sequence:

1.) Stop the product feed into the system.
2.) Stop other inlet equipment.
3.) Stop the mill.
4.) Stop outlet equipment.
5.) Stop fans.

4.5 Rotation

To equalize wear on the hammers and/or screens, the rotation of the Prater Evolution Mill can be reversed. Either changing motor leads or using an electrical reversing switch can reverse the mill.

CAUTION

ALWAYS change the position of the inlet diverter to correspond to the direction of the mill's rotation. See Section 4.6.

4.6 Inlet Diverter

The purpose of the inlet diverter is to keep material and air from exiting the mill through the inlet. The position of the inlet diverter is determined by the rotation of the mill. *See Figure 4.1*.

Remember to correctly reposition the diverter when changing the direction of the mill rotor. If the diverter is not properly positioned, the product will not feed correctly and result in a capacity reduction.

⚠WARNING

NEVER open the mill or attempt any form of inspection or maintenance until the mill has come to a complete stop and the electrical disconnect has been locked into the open position.

To change position of the diverter:

1.) Loosen setscrews on both sides.
2.) Reposition diverter to opposite side.
3.) Tighten setscrews into locking holes on side plate.

When operating with a very high capacity or a very coarse grind, the diverter may be left out to increase flow. The amount of flow keeps the material from going back out the inlet making the diverter unnecessary in these situations.

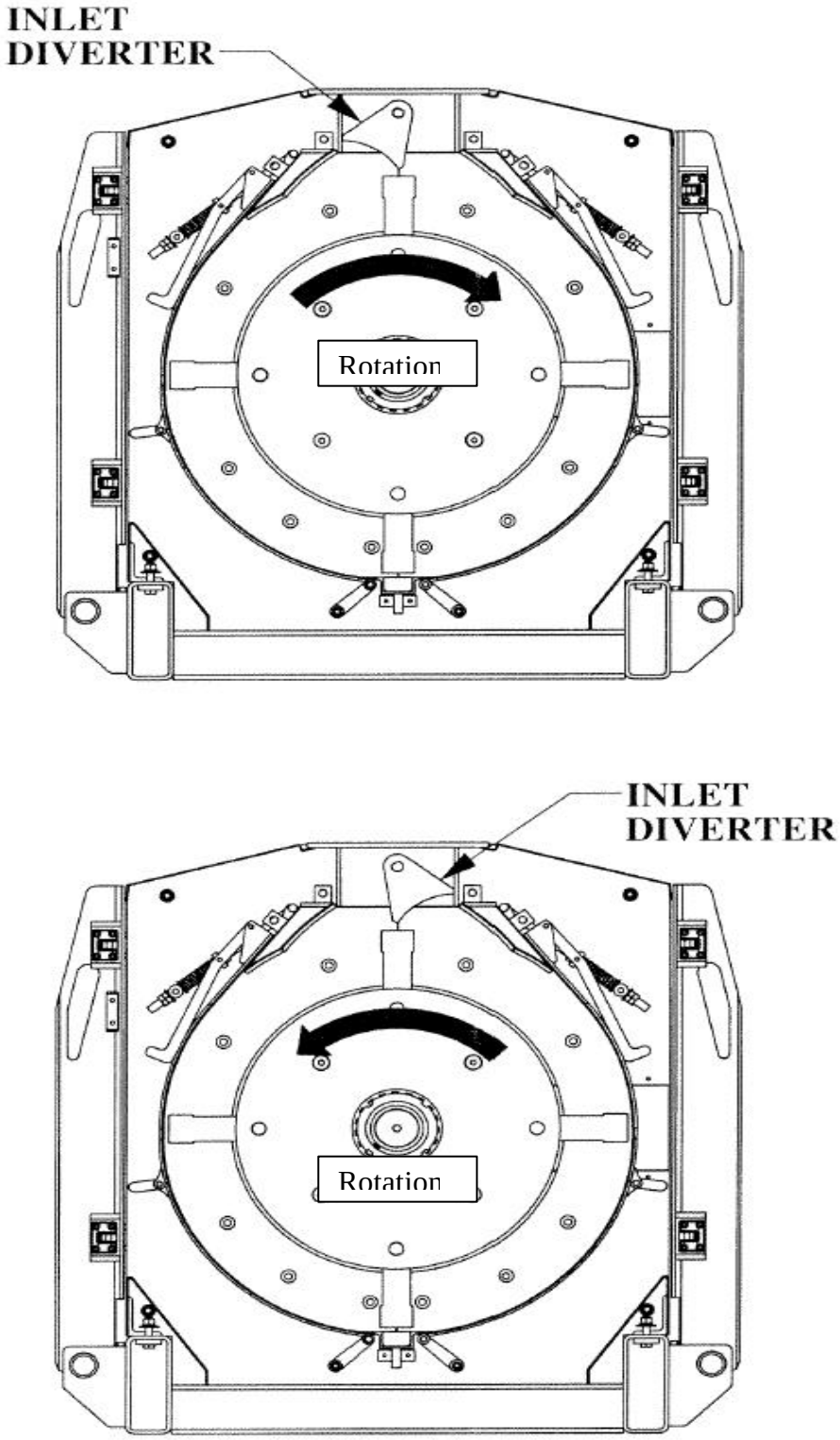

Figure 4-1: Inlet Diverter Positioning

Section 5: Maintenance

This section describes the general maintenance and replacement procedures for the Prater Evolution Mill.

5.1 Introduction

The Evolution Mill is designed to operate with little maintenance. Routine inspections and regular maintenance will identify any worn or broken parts before they become a problem. Worn or broken parts are damaging to the mill and its output. When operated without vibration or foreign materials entering the grinding chamber, only those parts subject to the heaviest wear, i.e. hammers, screens, and screen dividers will require maintenance.

WARNING

NEVER open the mill or attempt any form of inspection until the mill has come to a complete stop and the electrical disconnect has been locked in the open position.

5.2 Routine Inspection

Regular inspections are required to give advance warning of a problem. The simple, yet rugged, design of the Evolution Mill provides easy access for maintenance, cleaning, and service.

To decrease downtime, regularly inspect the machine and output. The output of the mill as well as regular inspections will determine when screens and/or hammers should be replaced, as well as give advance warning of a problem.

Maintain an inventory of standard wear items such as hammers, screens, and cutting plates. Having these replacement parts on hand will save both time and money. Contact Prater Industries Customer Service department for assistance on setting up an inventory for your particular needs.

Regularly check and remove debris from magnets or other foreign material collection systems. If the magnet or other collection system is dirty it could allow damaging materials to enter the grinding chamber, as well as decrease the amount of material flowing into the mill. The magnet or collection system should be cleaned before each start up. If you find a large amount of foreign material getting into the grinding chamber or a product that is prone to contamination, you may need to clean the magnet or collection system more often.

5.3 Screens

WARNING

NEVER open the mill or attempt any form of inspection or maintenance until the mill has come to a complete stop and the electrical disconnect has been locked in the open position.

The screens control the particle size of the final product. Inspect and clean the screens frequently to maintain the desired output. The screens may require re-rolling, interchange, or replacement if they are showing signs of wear. Worn screens cause:

- Lower capacity
- Increased power costs
- Non-uniform final product
- Coarser output

To check for signs of wear, visually inspect the output of the product as well as the screens themselves. Look for:

- Coarse final product
- Lower capacity
- Worn edges of the screen holes (rounded) **See Figure 5-1**
- Oval shape screen holes **See Figure 5-1**

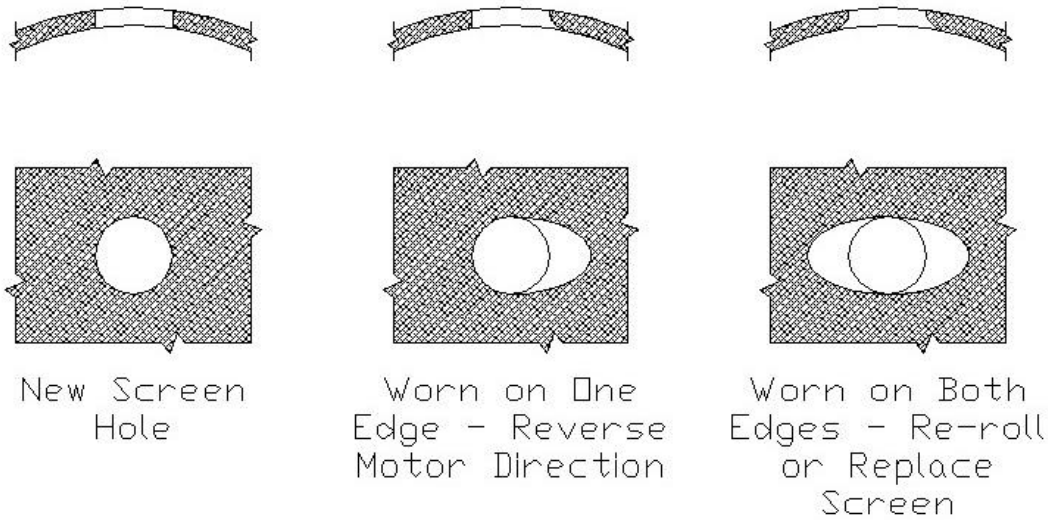

Figure 5-1: Signs of Screen Wear

Excessive wear to screens can be caused by:

- Extremely abrasive product
- Extremely fine product
- Excessively high feed rates
- Incorrect divider to hammer clearances
- Foreign material in the grinding chamber

When screens show signs of uneven wear consider these options to extend the life of the screens:

- Reverse the rotation of the motor if one side is getting more wear than the other
- Turn screens around if there is uneven wear from front to back or side to side
- For screens with punched round holes, you can re-roll the screens to put the sharp edge on the inside and the worn edge on the outside (Special screens that have formed holes rather than punched holes cannot be re-rolled).

5.3.1 Screen Replacement

WARNING

NEVER open the mill or attempt any form of inspection or maintenance until the mill has come to a complete stop and the electrical disconnect has been locked in the open position.

See Figures 5-2, 5-3 for this section

To remove worn screens:

1.) Turn off the mill and allow it to come to a complete stop.
2.) Disconnect and lock out the electrical power to the mill. See Section 2.9 for electrical requirements.
3.) Release the 4 door latches on each side of the mill and slide the access doors until they rest against the stops on the rail.
4.) Refer to Figure 5-3: while grasping the screen frame handle, push the release handle to orient it in the open position.
5.) Pull up on the screen frame handle while pushing on the latch handle to compress the springs and free the screen Carriage. Carefully lower the screen Carriage and remove the old screen.

To insert new screens:

1.) Place the new screen in the screen Carriage, and slide the bottom edge of the screen into the groove in the rota-break plate in the bottom of the mill.
2.) Firmly grasp the screen frame handle and the latch handle and raise the screen Carriage into the closed position. While pulling up on the screen frame handle push the latch handle to compress the springs and latch the screen Carriage.
3.) Return the release handle to the closed position.
4.) Close the mill doors and lock the 4 door latches.
5.) Follow start up procedures to activate the mill.

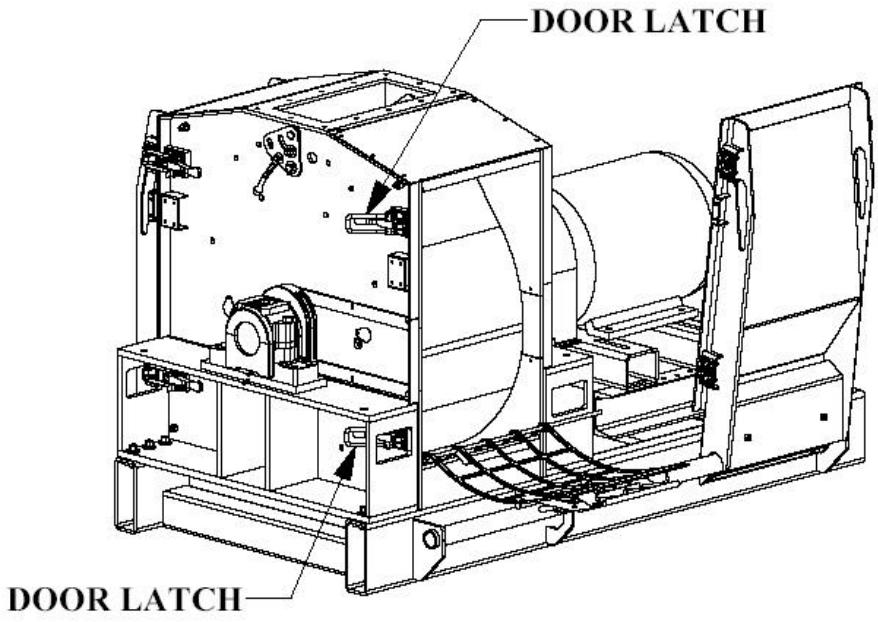

Figure 5-2: Evolution Mill Screen Removal

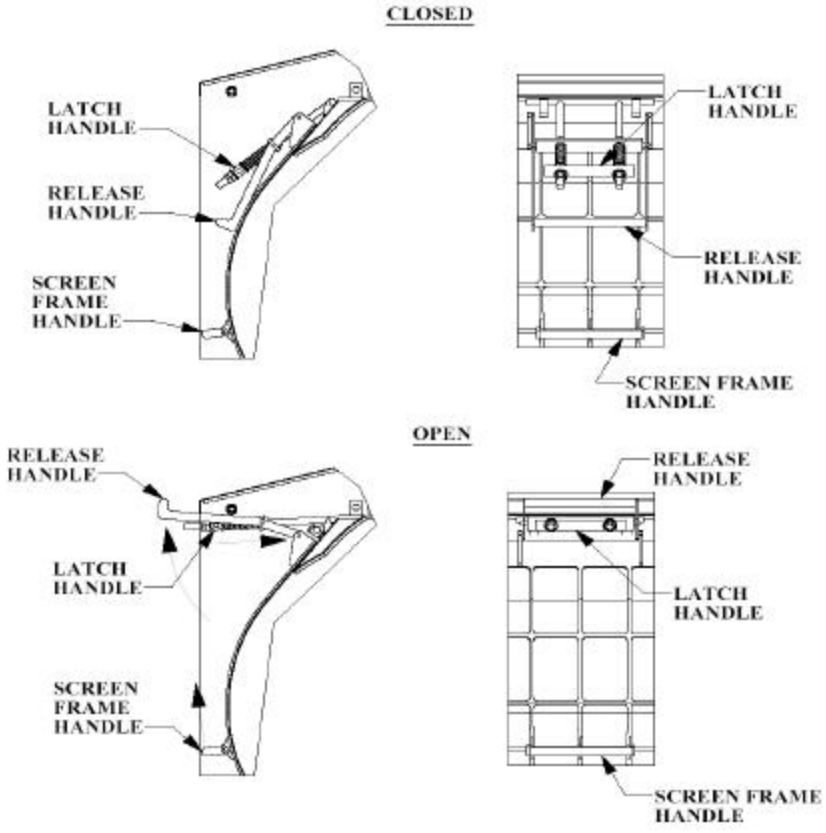

Figure 5-3: Evolution Mill Screen Carriage Latch

5.3.2 **Removing and Installing the Backing Plates.**

⚠WARNING

NEVER open the mill or attempt any form of inspection or maintenance until the mill has come to a complete stop and the electrical disconnect has been locked in the open position.

Using the procedure in Section 5.3, open the mill doors and release the screen Carriage to the open position. Refer to Figure 5-4. Slide the backing plate between screen and the screen Carriage, aligning the two grooves in the backing plate with top handle hinges on the back of the screen Carriage. Using the procedure in Section 5.3 close and relatch the screen Carriage and close and latch the mill doors.

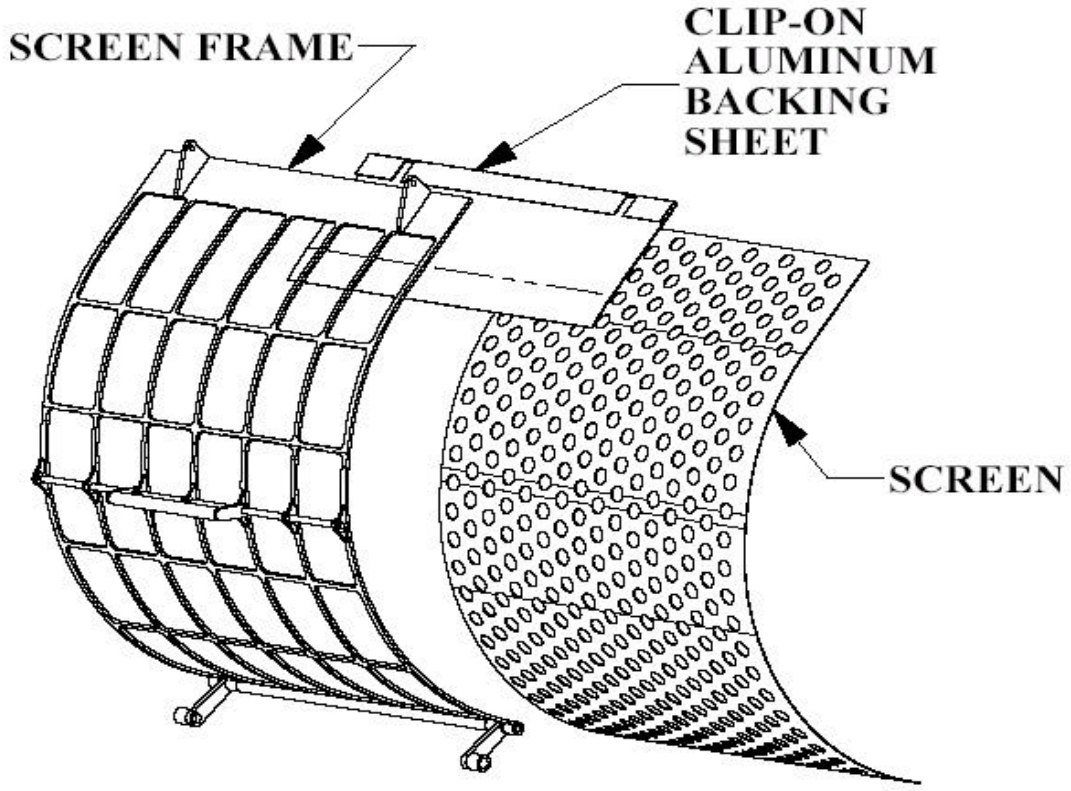

Figure 5-4: Installing and Removing the Backing Plates

5.3.3 Inspecting and Replacing the Screen Carriage.

The Screen Carriage is used to support the screens and the backing plates if they are installed. Over time these can be damaged, usually by foreign material entering the mill and may need to be replaced. Whenever the screens in the mill are changed you should inspect the screen carriage for cracks, bending due to impact and repair if possible. If the carriage is heavily damaged it will need to be replaced.

⚠WARNING

NEVER open the mill or attempt any form of inspection or maintenance until the mill has come to a complete stop and the electrical disconnect has been locked in the open position.

1. Using the procedure in section 5.3.1 stop the mill and remove the screens, and backing plates if installed.
2. Refer to figure 5-6A and remove the two bolts securing the hinge pin for the screen carriage.
3. Using a slide hammer if necessary remove the hinge pin from the mill body. This will allow removal of the screen carriage.
4. Position the new screen carriage to align the hinge with the pin holes and slide the hinge pin the full length of the mill.
5. Reinstall the two bolts to secure the new carriage.

5.4 Inspecting and Replacing the Cutting Plates and Rota-Break Bar

The “Cutting Plates”, and “Rota-Break Bar” are used to create areas of more intense grinding within the Evolution Mill grinding chamber. The sharp radius of the cutting plates is used for more intense size reduction and a more uniform particle size before the material is released into grinding chamber. These components should be inspected every time the screens are inspected or changed.

⚠WARNING

NEVER open the mill or attempt any form of inspection or maintenance until the mill has come to a complete stop and the electrical disconnect has been locked in the open position.

5.4.1 Inspecting the Cutting Plates and Rota-Break Bar

The cutting plates are item 4 in Figure 5-5. Refer to section 5.3.1 to open the mill doors and release the screen frame from the closed position. With the door open and the screens removed visually inspect the cutting plates by looking over the top of the rotor and inspecting the opposite side cutting plate for uneven or excessive wear. Non-uniform excessive cutting plate wear will in time cut through the plates causing the structure to fail and part or all of it to contact hammer rows setting in motion a breakdown. Rounded cutting plate slots will reduce capacity and skew particle distributions. Regular rotation changes spread wear, extending cutting plate effective service life. Repeat this inspection on the opposite side and every time perforated screens are changed. The same applies to the rota-break bar, however the rota-break bar is reversible if heavy wear is apparent in only one rotational direction

5.4.2 Replacing the Cutting Plates

⚠WARNING

NEVER open the mill or attempt any form of inspection or maintenance until the mill has come to a complete stop and the electrical disconnect has been locked in the open position.

Using the procedure in Section 5.3.1 open the mill doors and remove the screens.

Refer to figure 5-5.

1) Undo the fasteners and remove the Top Cover Plate (6).
2) Undo the fasteners and remove the Backing Box (5).
3) Lift out the old Cutting Plate, noting the orientation since it is not symmetrical.
4) Install the new Cutting Plate ensuring that it is properly oriented.
5) Reinstall the Backing Box and secure with the fasteners removed in step 2.
6) Reinstall the Top Cover Plate and secure with the fasteners removed in step 1.
7) Refer to Section 5.5.2 and measure the clearance between the hammers and the new Cutting Plates; it should be 3/16” on both Cutting Plates.

8) Using the procedure in Section 5.3.1 close and lock the screen Carriage in the closed position.
9) Close and latch the mill doors.

5.4.3 Replacing the Rota-Break Bar.

WARNING

NEVER open the mill or attempt any form of inspection or maintenance until the mill has come to a complete stop and the electrical disconnect has been locked in the open position.

Using the procedure in Section 5.3.1 open the mill doors and remove the screens.

Refer to figures 5-5, and 5.6.

1. From either side of the mill undo the fasteners and remove the two liner rings (Figure: 5-5,1)
2. Block the Rota-Break Bar securely to prevent it from falling into the mill.
3. Remove Fasteners securing the Rota-Break Bar (Figure 5-6,1).
4. Remove Rota-Break Bar and either rotate or replace and replace fasteners removed in step 3.
5. Reinstall the two liner rings and secure with the fasteners removed in step 1.
6. Using the procedure in Section 5.3.1 close and lock the screen carriage in the closed position.
7. Close and latch the mill doors.

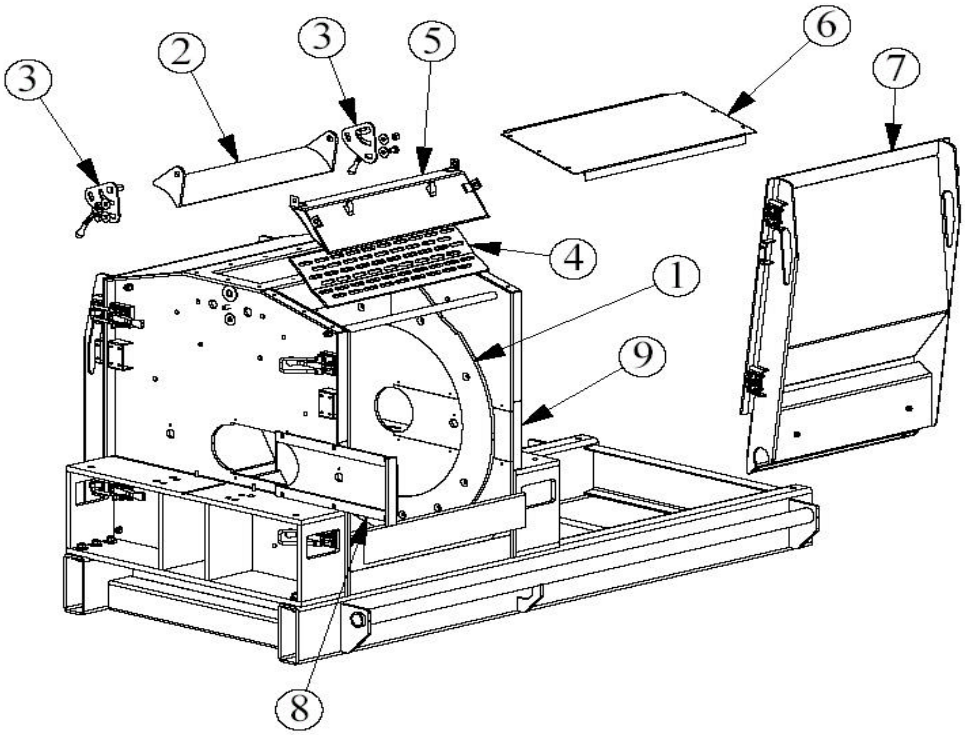

ITEM NO.	DESCRIPTION	QTY.
1	LINER RING	2
2	INLET DIVERTER	1
3	DIVERTER LEVER PLATE	2
4	CUTTING PLATE	2
5	BACKING BOX	2
6	TOP COVER	2
7	DOOR ASSEMBLY	2
8	ROTOR REMOVAL PLATE, RIGHT	2
9	ROTOR REMOVAL PLATE, LEFT	2

Figure 5-5: Evolution Mill Body Assembly

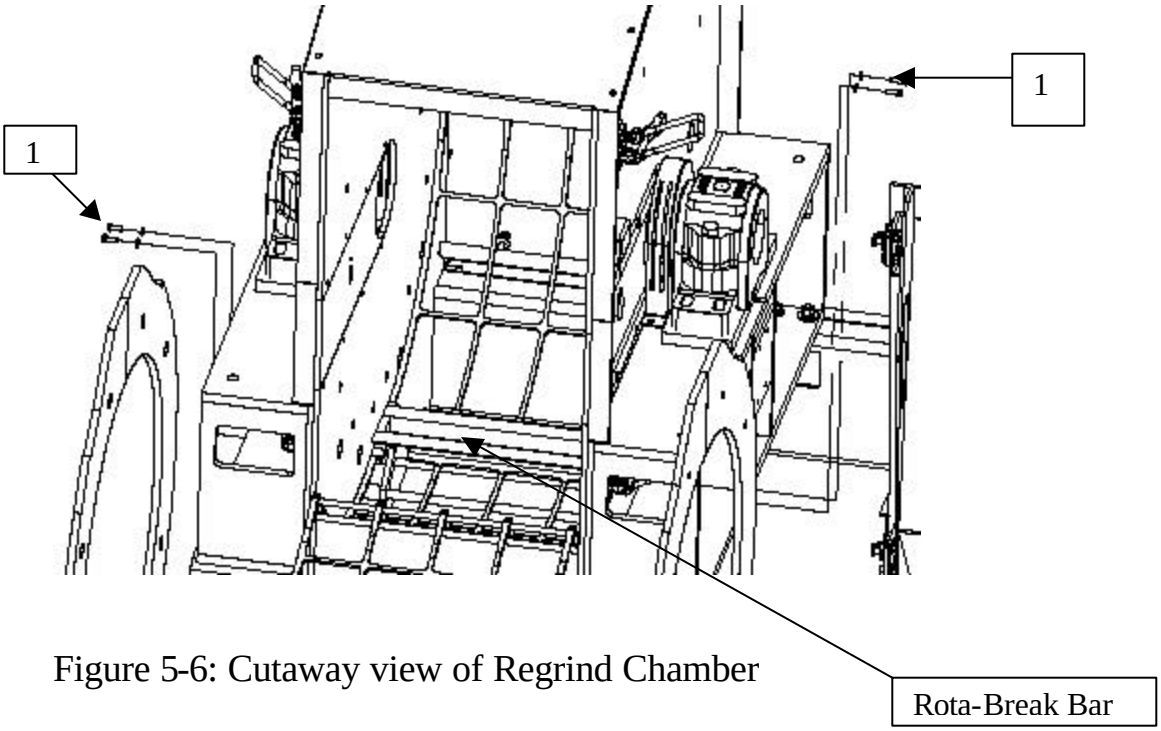

Figure 5-6: Cutaway view of Regrind Chamber

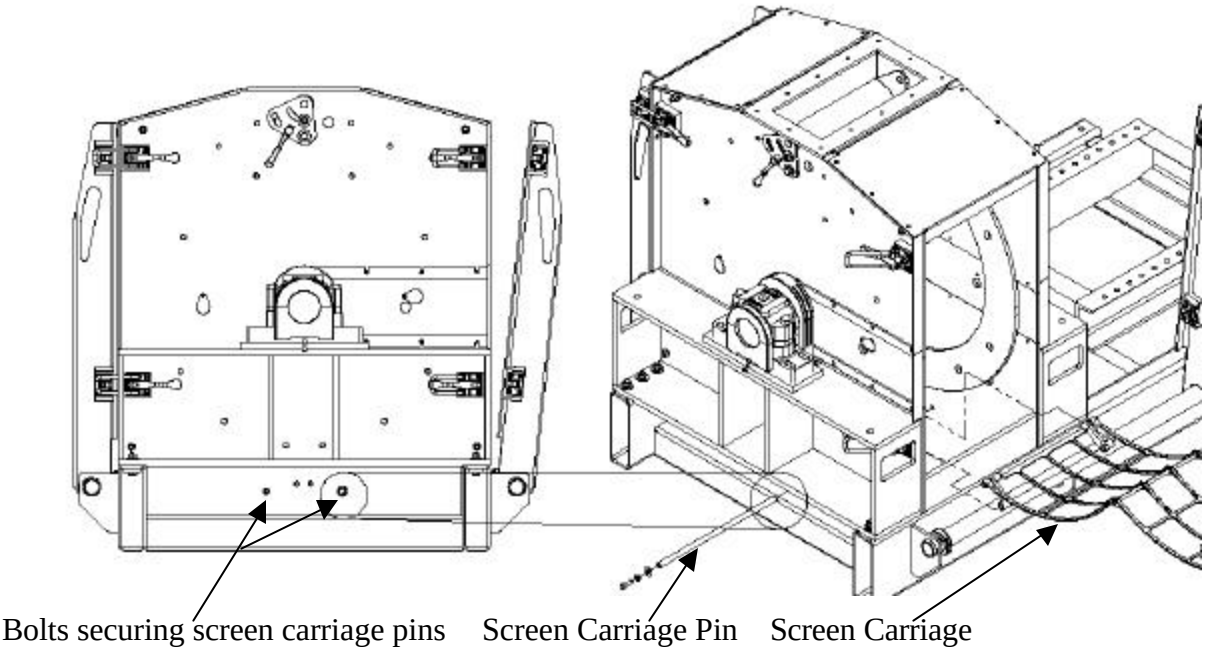

Figure 5-6A: Bolt locations for screen carriage and Rota-Break Bar

5.5 Inspecting the Hammers

Prater supplies a wide range of grinding devices to meet virtually every milling need including swivel hammers, rigid hammers, and knife blades. All hammers are pre-weighed and shipped as balanced groups, and may be bench assembled since they need no additional balancing.

Hammers will wear, but should not break under normal operating conditions. Check the hammers in the mill frequently for wear. Worn hammers can result in:

- Vibration
- Coarser output
- Increased motor amperage
- Lower capacity

To check for signs of wear, visually inspect both the product and the hammers themselves. Signs of wear include:

- Edges worn to over ½" on both sides See Figure 5-5
- Decreased output
- Coarser output

Mill output is the most important consideration for determining when hammers should be replaced. When the fineness of the product is not being achieved or the output is decreased, worn hammers could be the cause. Excessive wear to hammers may be caused by:

- Extremely abrasive product
- Extremely fine product
- Excessively high feed rate
- Foreign material in the grinding chamber

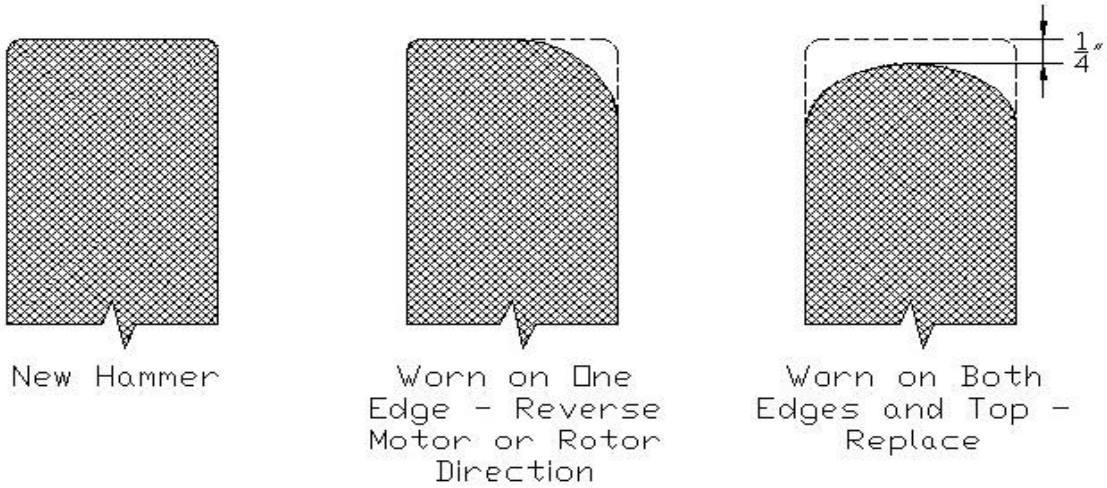

Figure 5-7: Signs of Hammer Wear

5.5.1 Hammer and Hammer Pin Replacement

WARNING

NEVER open the mill or attempt any form of inspection or maintenance until the mill has come to a complete stop and the electrical disconnect has been locked into the open position.

When replacing hammers due to wear, always replace a full set. If replacing a hammer because of breakage, also replace an opposing hammer to maintain balance. Never replace one hammer. You can replace hammers without removing the rotor assembly from the mill.

To remove worn hammers:

1.) Remove screens See Section 5.3.1.

2.) Open the Hammer Pin Hole Covers see figure 5-8.

NOTICE

Before disassembly check the configuration of the rotor and make sure you either sketch the configuration or have a drawing supplied by Prater-Sterling

3.) Align one of the Hammer Pins with the hole in the mill housing. Be sure to secure the rotor to prevent movement while removing the Hammer Pins. Remove support pins one at a time. One of the spacers on each pin is a locking collar; loosen the setscrew to allow movement of the pin. Start by using a hammer and a brass bar to tap the pin until it can be gripped firmly on the other side. Slowly pull each support pin out and use either a box or another person to catch the hammers and spacers. Use the same procedure for the remaining pins to install hammers:

CAUTION

Always reassemble hammers to match original configuration. Use balanced sets of hammers to prevent vibration.

1.) Align the Hammer Pin Hole in the housing with one of the Hammer Pin Holes in the rotor end plate and block the rotor to prevent rotation.

2.) Insert the new or old hammer pin through the housing and partially through the rotor end plate.

3.) Refer to the sketch or drawing and slide the hammers, spacers (or locking collar) into position while pushing the hammer pin into the first intermediate plate. Repeat until all the hammers and spacers are installed.

4.) Measure hammer to cutting plate distance at each location. All hammers must be an equal distance from the Cutting Plates. See Section 5.4.2.

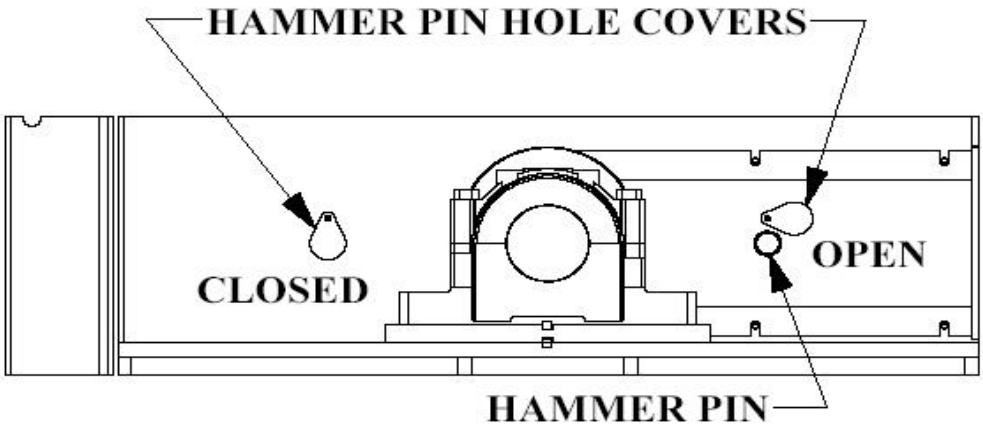

Figure 5-8: Hammer Pin Hole Cover positioning

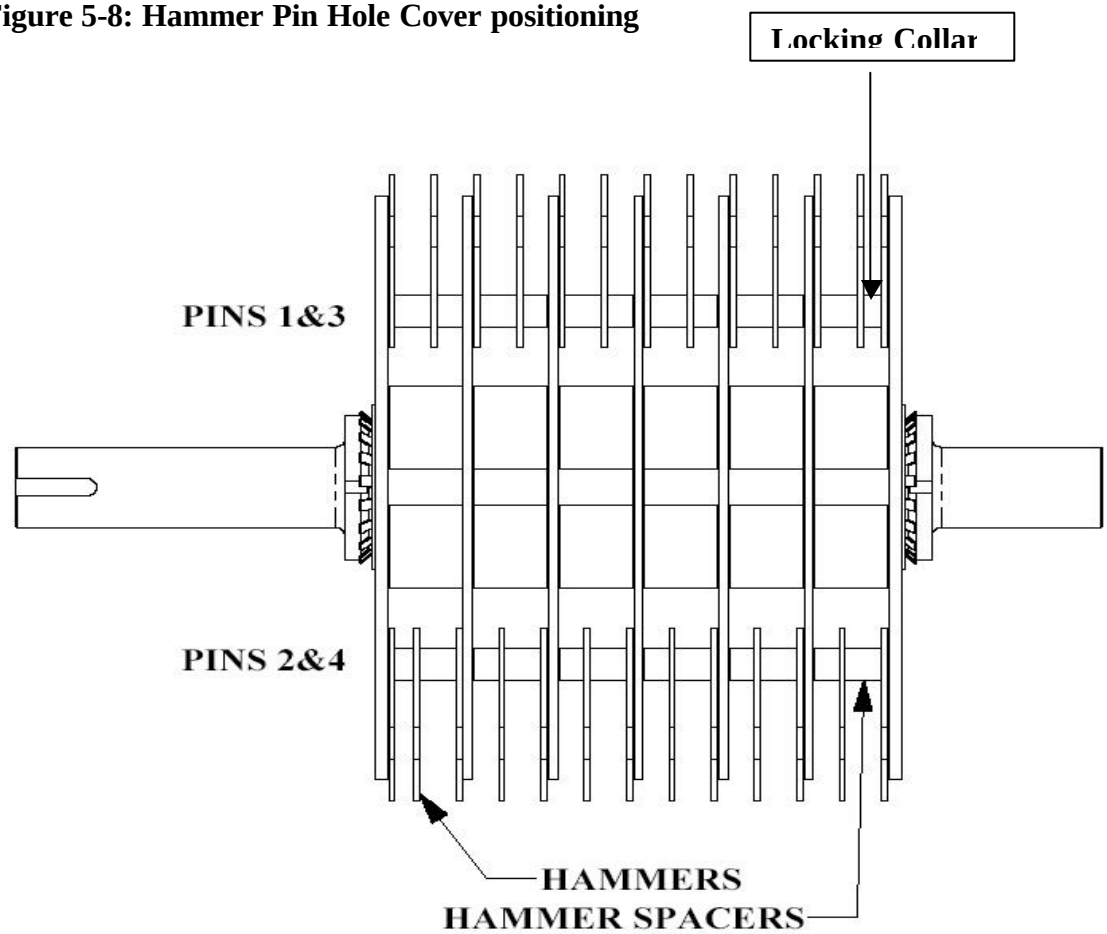

Figure 5-9: Fully Assembled Rotor

5.5.2 Hammer To Cutting Plate Measurement

Measure from the corner of the hammer to the face of the cutting plate while holding the hammer at an angle. All hammers must measure the same distance

from both cutting plates. For new hammers, the clearance is 3/16” at each cutting plate.

Hammers come in balanced sets. If they do not measure the same distance all the way around the rotor, the cutting plates may not be seated properly. Call your Prater representative if you encounter difficulties.

CAUTION	Do not mix hammers from different bundles. This will cause vibration. If hammers are shipped loose or are mixed, balance the hammers in sets of 4 or 5 to within 1½ grams of each other.

5.6 Changing The Bearings

This section refers to sections 5.3.1, 5.4.2, figures 5-12, 5-13, 5-14, 5-15.

The Evolution mill uses SKF Spherical Roller Bearings in an SAF split pillow block housing. The bearing incorporates a tapered adapter sleeve with a split cylindrical bore. Care must be taken to insure that all steps in the process are done in the manner prescribed and with the proper tools. Before starting the assembly, inspect all parts to be sure they are clean of dirt, grease, burrs, etc. Lay all parts on the assembly table on a clean, dry surface.

5.6.1 Bearing Removal

⚠WARNING	NEVER open the mill or attempt any form of inspection or maintenance until the mill has come to a complete stop and the electrical disconnect has been locked into the open position.

1. Refer to section 5.3.1 and open the mill door to unlatch the Screen Carriage and remove the screen.
2. Refer to section 5.3.3 to remove the Screen Carriage.
3. Refer to section 5.4.2 to remove the Cutting Plate.
4. Remove fasteners securing the Liner Rings (Figure 5-10, 4) and remove from mill. There are two halves that must be removed.

5. Remove fasteners securing the right and left Rotor Removal Plates (Figure 5-10, 5) and remove from mill.
6. Refer to figure 5-10, and remove the elastomer element flange bolts securing the elastomer elements to the omega coupling hubs. You will not be able to remove either hub at this time.
7. Refer to Figure 5-12. Remove two fasteners securing the guards on both sides of the mill and remove the guards.

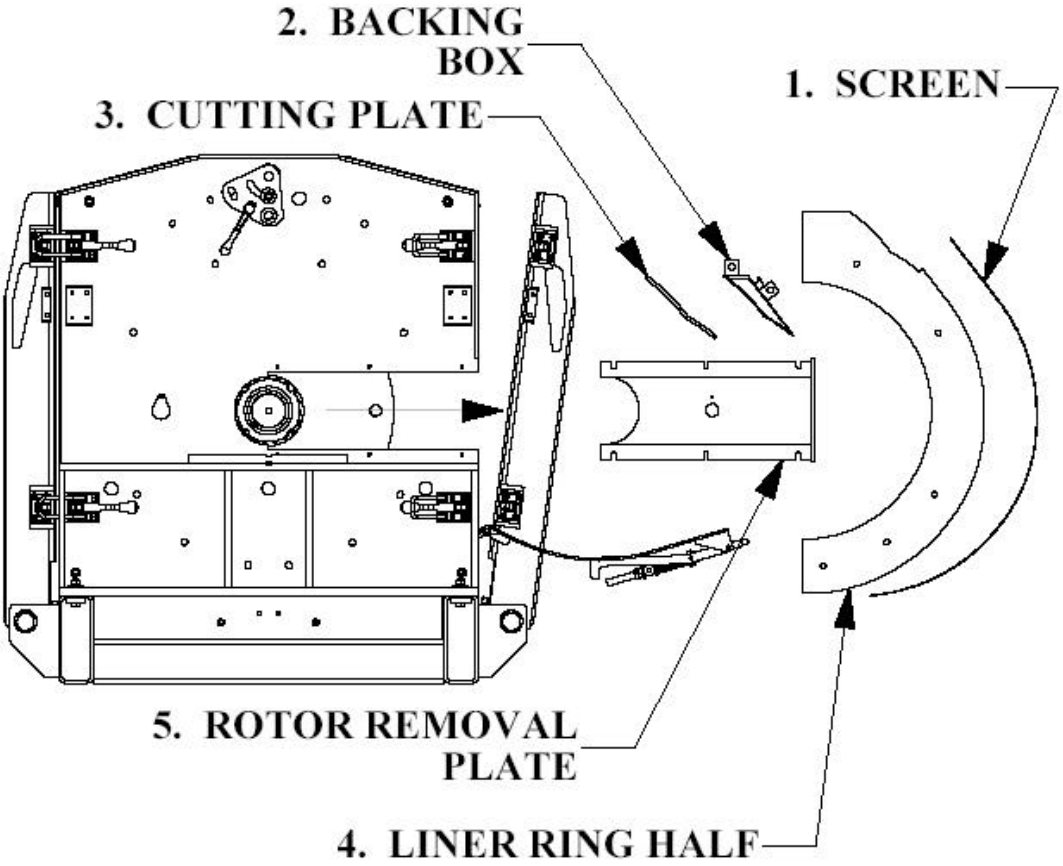

Figure 5-10: Rotor Removal

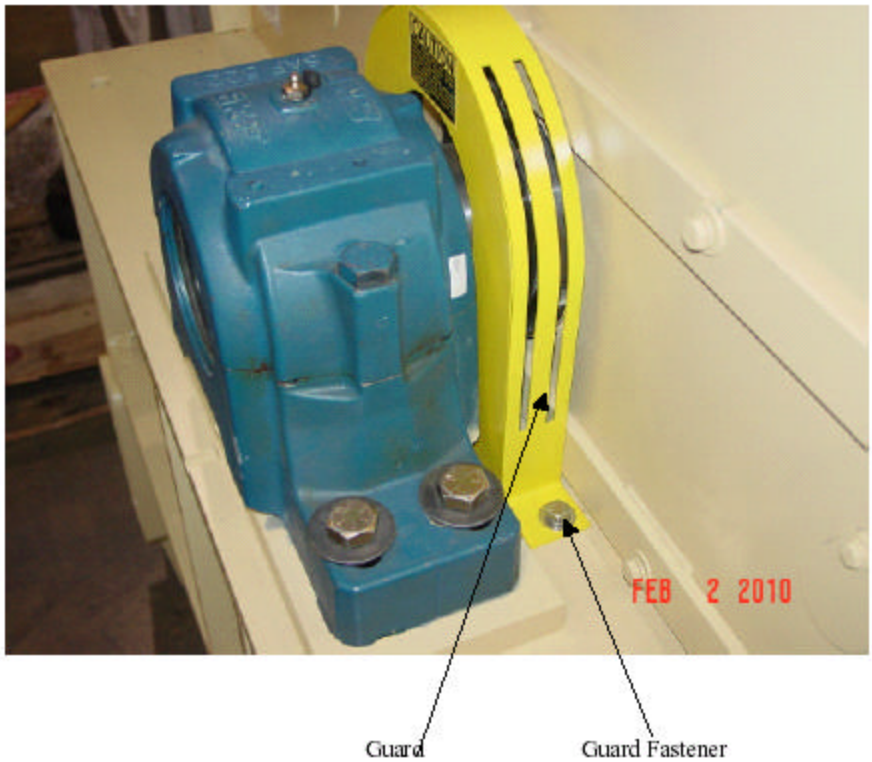

Figure 5-12: Evolution Mill Shaft Guard

8. Using a hoist and straps rated for loads at least 1.5 times the weight of the rotor, secure the straps on the rotor shaft that was exposed when the two guards were removed. Pick up the slack in the lifting straps, but do not tension at this time.
9. Refer to Figure 5-13: Remove the 4 bolts securing the bearing block to the mill body. After the bolts have been removed carefully tension the lifting straps and raise the rotor/bearing assembly ~1.0". Guide the rotor along rotor removal slot until it has completely cleared the mill body.
10. Refer to Figures 5-13, 5-14, and 5-15: Remove the two bolts securing the bearing halves together. Remove the stabilizing ring from the drive side housing, and the end cap from the non-drive side assembly and set the halves and the other components aside for now.
11. Refer to Figure 5-15, and using a hammer tap the lock washer tab up to allow removal of the lock nut.

12. Using a spanner wrench and hammer loosen the lock nut 3 – 4 turns to unseat the bearing from the sleeve. If the bearing does not unseat use a 3-arm puller to unseat the bearing.
13. Finish removing the lock nut, lock washer, and bearing from the sleeve.
14. If you are replacing the sleeve mark the position of the sleeve on the shaft. Use a screwdriver and hammer to open the slot and slide the sleeve off the shaft.

5.6.2 Installing New Bearings

1. Measure the unmounted internal radial clearance of the new bearings by inserting progressively larger feeler blades the full length of the roller between the most vertical unloaded roller and the outer sphere and verify that they are in specification per Table: 5-1.
2. If you are replacing the sleeve, wipe off the preservative and apply a thin oil coating to the outside of the sleeve. Use a screwdriver and hammer to open up the slot and slide the sleeve on the shaft.
3. Slide the inboard seal onto the shaft.
4. Wipe the preservative off the bearing and apply a thin coat of oil to the bore. Place the bearing on the sleeve, and screw the lock nut with its chamfered face toward the bearing (do not install the lock washer).
5. Turn the lock nut sufficiently to ensure the shaft makes proper contact (self-locking) with the sleeve and continue to drive the bearing up the sleeve until proper reduction in clearance is attained.
6. Remove the lock nut and install the lock washer and reinstall the lock nut, taking care not to drive the bearing further up the sleeve. Bend one of the tabs on the lock washer into the seat on the lock nut.
7. Install the outboard seal onto the shaft.
8. Mount the bearings into the blocks and loosely fasten the covers and reinstall the rotor in the mill housing.
9. Secure the bearing blocks to the mill body and remove the top covers.

10. Smear grease between the rolling elements and work in until the bearings are 100% full. The lower half of the housing should be packed 1/3 – ½ full with grease.
11. Install the stabilizer ring in the drive side bearing assembly, and the end cap in the non-drive bearing housing.
12. Install both bearing top covers.

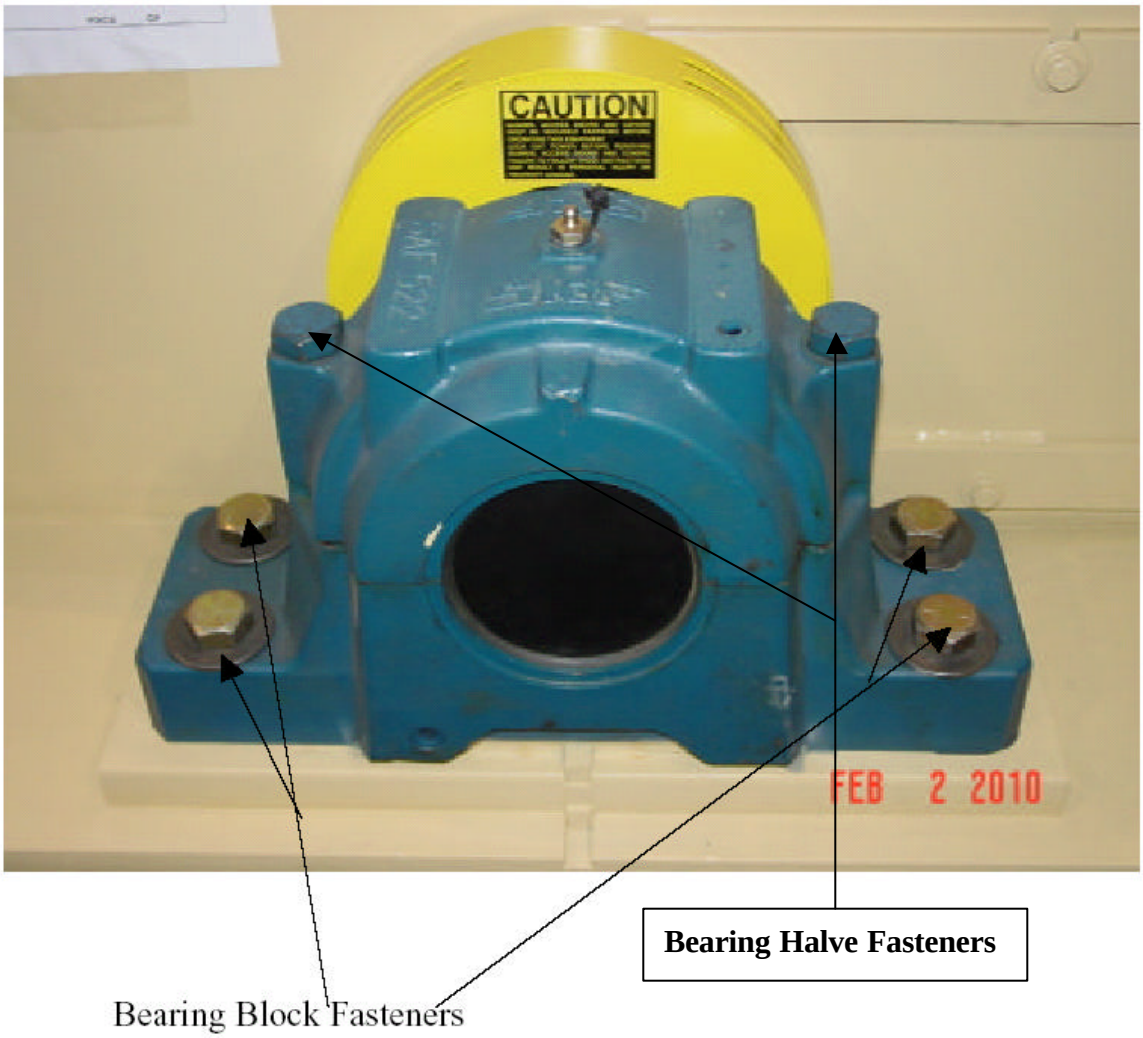

Figure 5-13: Bearing Block Fasteners

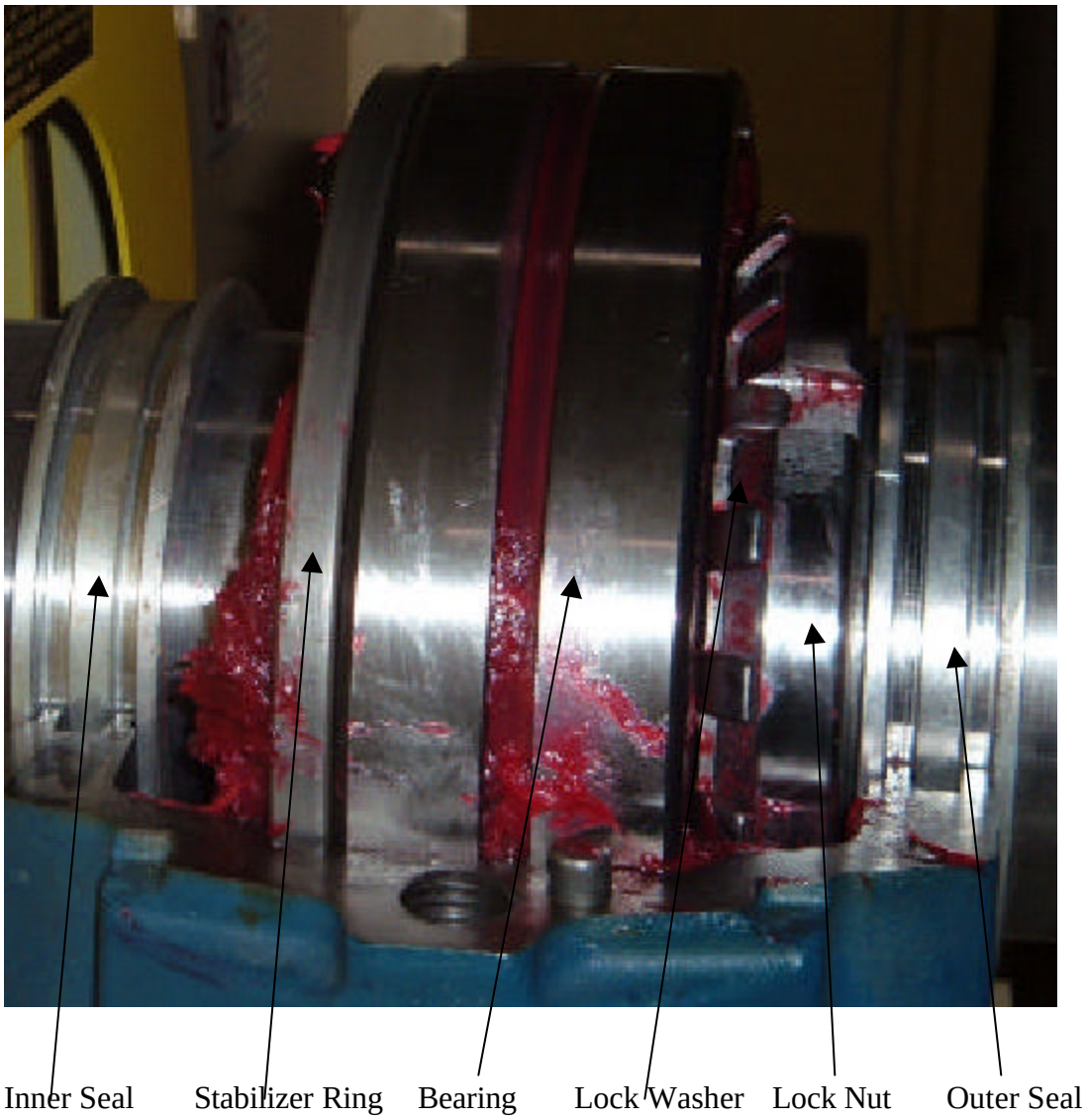

Figure 5-14: Drive side bearing fully assembled with top cap removed

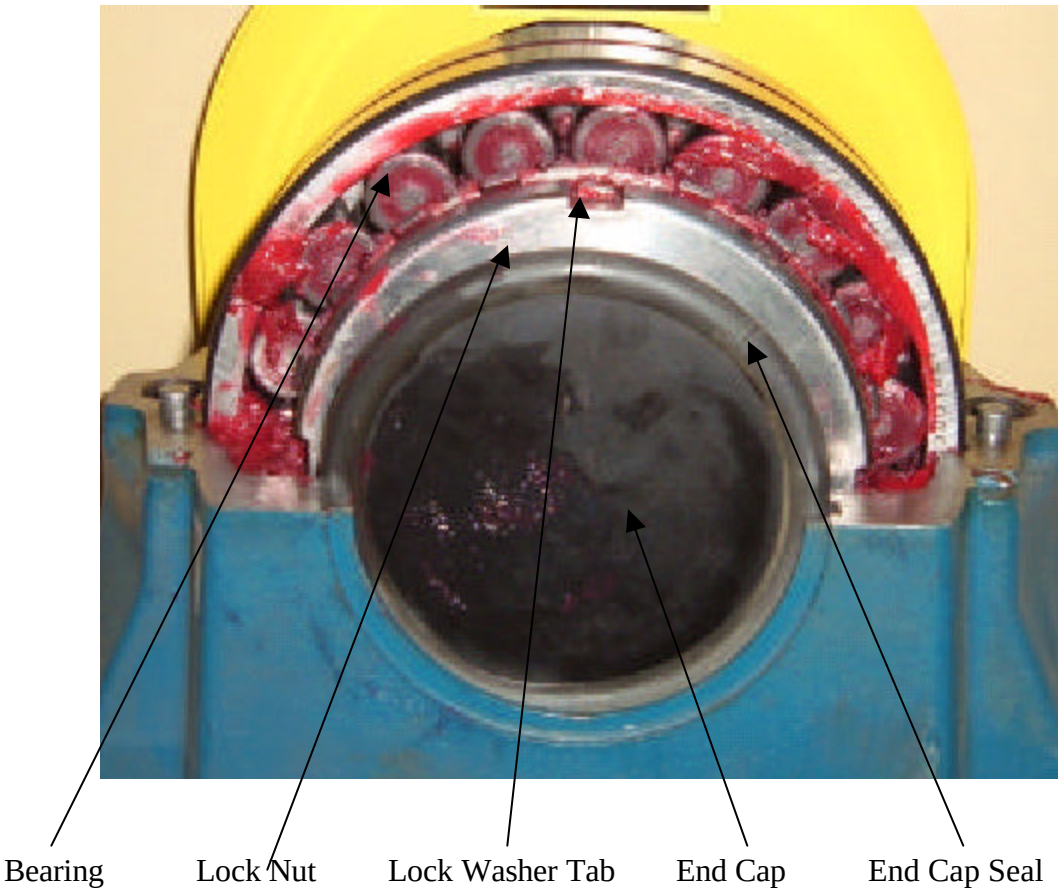

Figure 5-15: Non-Drive side bearing assembled with top cover removed

Bearing Clearances

Mill Size	Unmounted Radial Internal Clearance (in)		Mounted Reduction in Radial Internal Clearance	
	Min	Max	Min	Max
xx22	0.0031"	0.0043"	0.0018"	0.0025"
xx32, xx42, xx50, xx64	0.0039"	0.0053"	0.0020"	0.0028"

Table 5-1: Bearing Clearances

CAUTION

Do not use the maximum reduction in internal radial clearance when the unmounted internal radial clearance is in the lower half of the tolerance, or when large temperature differentials between the rings are possible.

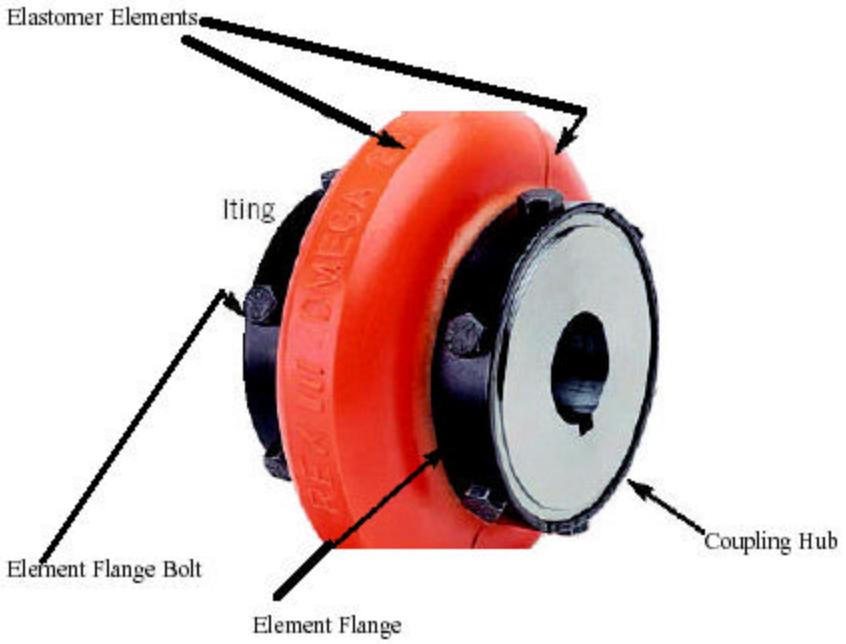

Figure 5-16, Omega Elastomer Coupling Components

5.7 Coupling Installation Instructions

Because of the possible danger to person(s) or property that may result from improper use or installation of products, it is extremely important to follow the proper installation and operational procedures.

All rotating power transmission products are potentially dangerous and can cause serious injury. They must be properly guarded in compliance with OSHA standards for the speeds and applications in which they are used. It is the responsibility of the user to provide proper guarding.

Failure to secure cap screws properly could cause coupling components to become dislodged during operation resulting in personal injury.

1.) Inspect both driving and driven shafts and hub bores making sure they are free from dirt and burrs. Be sure the keys fit shafts properly.

2.) Mount both hubs to the shafts securing only one hub. The other hub should be loose for minor adjustment of spacing. Where tapered bushings are used, follow bushing manufacturer's instructions. If hub is bored for an interference fit, we recommend heating the hub in water, oil bath, or an oven and quickly positioning it on the shaft. Do not spot heat hub as it may cause distortion.

3.) Place half of the elastomer element around the hubs and secure with self-locking cap screws. The elastomer element will space the other hub. It is important to have cap screws properly tightened. See Figure 4.4 for recommended cap screw torques and instructions.

Max. HP	Ft. Lbs.	Nm
30	17	23
100	30	56
300	75	100

Table 5.2
Cap screw Torque Specifications

4.) Next secure the other hub.

5.) Mount the other half of the elastomer element to the hub. Be sure to secure the rings to the spacer element if provided. Tighten all cap screws to the recommended cap screw torques in Figure 4.4.

The same procedure applies to both the standard design coupling and spacer coupling installation.

CAUTION

Cap screws have self-locking patches, which should not be reused more than twice. Cap screw can be further used with application of a thread-locking adhesive. Do not lubricate cap screw threads.

5.8 Equipment Alignment

Coupling alignment is directly related to equipment and coupling life. Although Omega couplings can withstand gross misalignment, care should be taken for best possible alignment to assure optimum performance. The calipers straightedge alignment procedure is described below. If greater alignment accuracy is desired, a dial indicator method is recommended. There are occasions when equipment manufacturers require more specific alignment tolerances, in which case the manufacturer's recommendations should be followed.

1.) To correct for angular misalignment, use calipers to check the gap between hubs. Adjust or shim equipment until the gap is the same at all points around the hubs.
2.) To correct parallel offset, place a straightedge across the hub flanges in two places at 90° to each other. Adjust or shim equipment until the straightedge lays flat on both sides.
3.) Tighten down connected equipment and recheck alignment.
4.) Install elastomer element, lightening all cap screws to the values shown in Figure 4.4 as described on the reverse side.
5.) If practical, recheck and tighten cap screws after several hours of operation.

5.9 Changing the Shaft and/or Rotor Plates

There are 2 rotor configurations that are assembled and disassembled in the same manner. The dual chamber rotor has a center plate, center spacers, center bumper pins, and sleeves that are not incorporated into the single chamber rotor. This does not change the physical procedure for assembling and/or disassembling the rotor.

1. Using the procedure in Section 5.5.1 remove the hammers, spacers, and hammer pins from the rotor.
2. Using the procedure in Section 5.6 remove the rotor assembly from the mill and remove the bearings.

3. Create a fixture that will allow the rotor to be stood up on end, and stand the rotor up with the drive side down. Figure 5-19 shows a rotor in a stand during assembly.
4. Refer to Figure 5-18. Remove the lock nut, lock washer, and spacer washer from one side of the rotor (Figure 5-18 – 12, 13, 14).
5. Remove all the fasteners attaching the end plate to the bumper pins (Figure 5-18, 12).
6. Using a hoist and at least 2 – hooks, lift the top end plate off the bumper pins and the rotor shaft.
7. Remove the shaft spacer, bumper pin sleeves, and shims from the shaft and bumper pins. The shims are 0.018" and will probably be needed when the new rotor is assembled. Inspect all components for wear and replace as necessary. If you are replacing the shaft and using the same rotor plates the shim / spacer configuration will be the same as the current configuration
8. Continue steps 5, 6 and 7 until the rotor is fully disassembled. If the rotor is a dual chamber rotor be sure to keep the center bumper and center shaft spacers separate from the others.
9. Refer to Appendix A and determine the number of shims needed for each bumper spacer, and shaft spacer.
10. Install the drive side spacer washer, lock washer and locknut onto the new or existing shaft and stand the shaft up in the fixture.
11. Attach the bumper pins to the drive side rotor end plate with the hardware removed in step 5.
12. Insert the rotor key in the shaft and slide the end plate - bumper pin assembly onto the shaft until it rests against the spacer washer.
13. Slide the bumper sleeve spacer, shims, and shaft spacer and shims onto the corresponding pin/shaft.
14. Slide the first intermediate rotor plate onto the shaft and repeat step 13.
15. Continue steps 13 and 14 until all plates are installed.

NOTICE

If you have a dual chamber rotor don't forget to install the center plate, special bumper pin sleeves, shaft spacer, and shims for the center plate.

16. Install the spacer washer, lock washer and locknut and tighten both ends of the shaft and bent the locking tab for the lock washer into the tab on the lock nut.
17. Refer to Appendix A and measure the overall length of the rotor as described in Appendix A.
18. Use the procedure 5.6.2 to install the bearings and remount the rotor assembly into the mill.
19. Use procedures: 5.3.3, 5.4.2, and 5.5.1 to install the cutting plate, backing plate, and screen carriage.

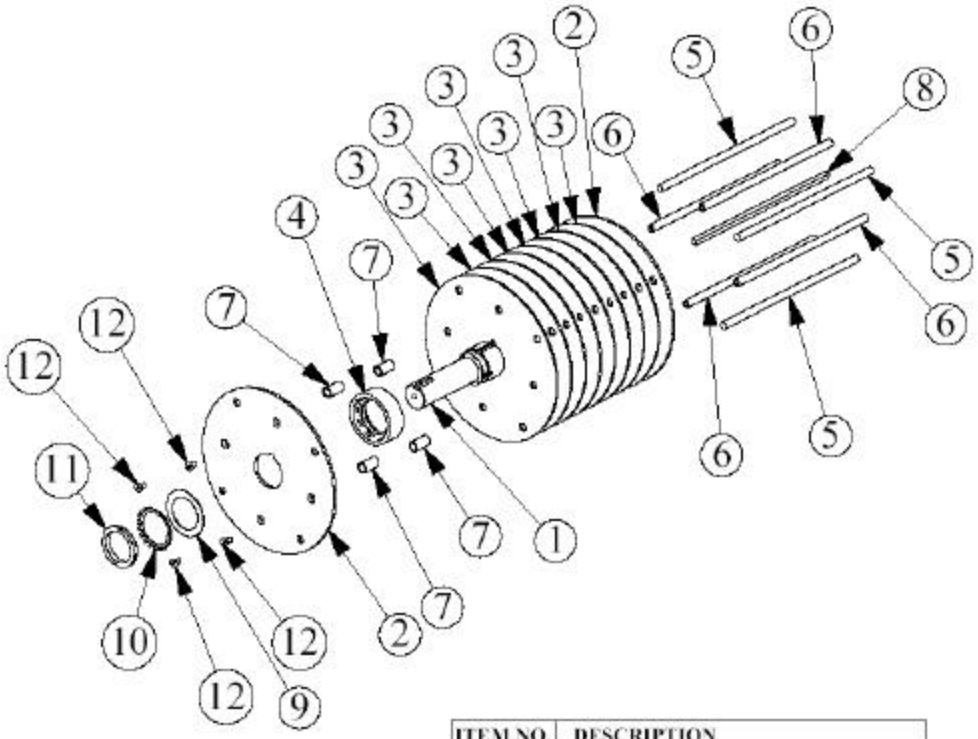

ITEM NO.	DESCRIPTION
1	SHAFT
2	ROTOR END PLATE
3	ROTOR INTERMEDIATE PLATE
4	SHAFT SPACER
5	HAMMER PIN
6	BUMPER PIN
7	BUMPER PIN SLEEVE
8	ROTOR KEY
9	SPACER WASHER
10	LOCKWASHER, W-28
11	LOCKNUT, AN-28
12	SCREW,C'SUNK,SOCKET,3/4-10

Figure 5-17: Single Chamber Rotor Exploded View

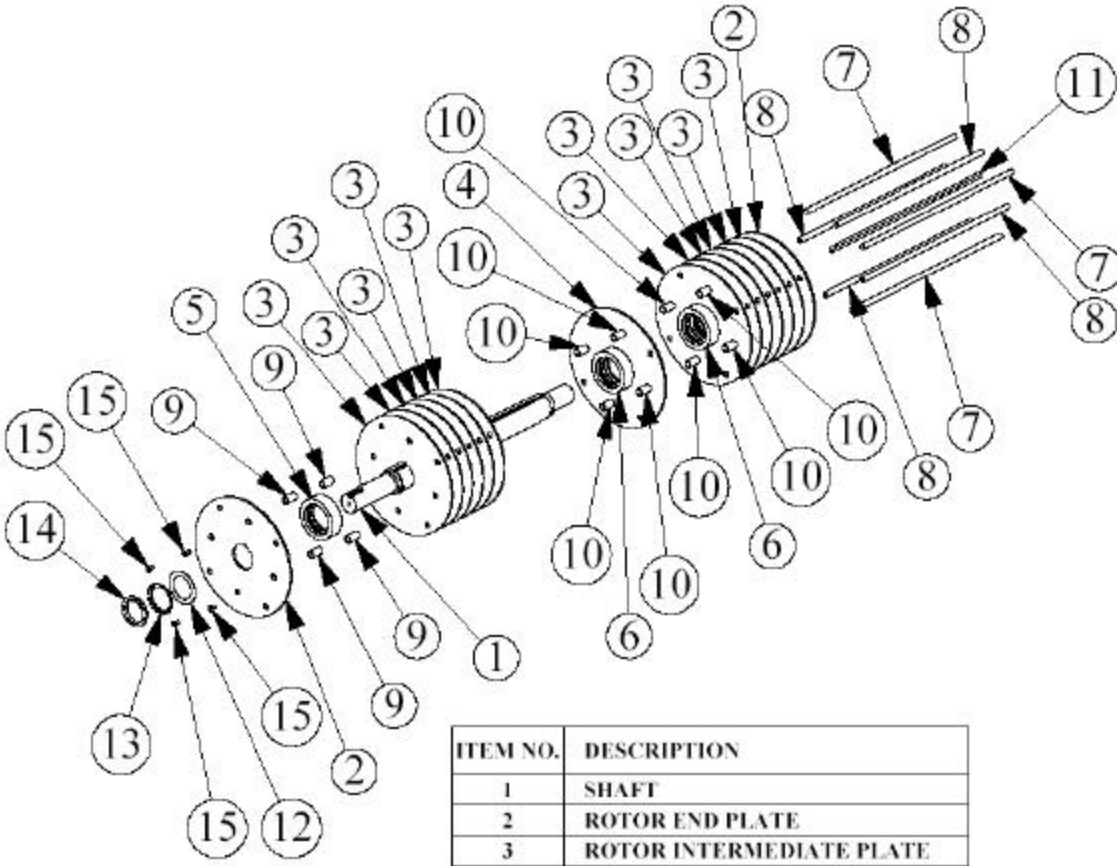

ITEM NO.	DESCRIPTION
1	SHAFT
2	ROTOR END PLATE
3	ROTOR INTERMEDIATE PLATE
4	ROTOR CENTER PLATE
5	SHAFT SPACER
6	CENTER SHAFT SPACER
7	HAMMER PIN
8	BUMPER PIN
9	BUMPER PIN SLEEVE
10	CENTER BUMPER PIN SLEEVE
11	ROTOR KEY
12	SPACER WASHER
13	LOCKWASHER, W-28
14	LOCKNUT, AN-28
15	SCREW,C'SUNK,SOCKET,3/4-10

Figure 5-18: Dual Chamber Rotor Exploded View

Figure 5-19: Rotor on stand during assembly

Section 6: Troubleshooting

This section describes the general maintenance and replacement procedures for the Prater Evolution Mill.

6.1 Introduction

This section is offered as a general guide to analyzing problems. If after reviewing this section you have not identified your problem, contact a Prater customer service representative for further assistance.

NEVER open the mill or attempt any form of inspection until the mill has come to a complete stop and the electrical disconnect has been locked in the open position. Never attempt to slow down the mill by any means mechanical or otherwise.

Symptom	Possible Cause	Suggested Solution
Final Product Is Too Coarse	1. Improper screen size	1. Install proper screens
	2. Worn or damaged screens	2. Rotate or replace screens
	3. Feed rate too high	3. Adjust to proper feed rate
	4. Improper air flow	4. Correct or adjust air flow
	5. Worn hammers	5. Rotate or replace hammers
	6. Improperly installed screens	6. Install screens properly
	7. Feed product change a. moisture b. size c. fat content d. chemical differences	7. Inspect feed product and adjust system as required
Final Product Is Too Fine	1. Improper screen size	1. Install proper screens
	2. Screens blinding a. hygroscopic material b. heat sensitive material c. high moisture d. high fat content	2. Clear screens and check feed product. Contact your Prater representative if further assistance is required.
	3. Air flow too low a. duct restricted b. dust collector plugged c. blower damper closed d. filters dirty e. blower drive belt slipping	3. Adjust to proper air flow a. Remove restriction b. Clean dust collector c. Open blower damper d. Replace filters e. Retention belts
Low Capacity	1. Screens worn a. abrasive product b. fibrous product c. tramp materials	1. Rotate or replace screens
	2. Screen size too small	2. Install proper screens
	3. Improper air flow	3. Adjust to proper air flow
	4. Non-uniform feed causing fluctuating mill motor amperage of more than 10%	4. Correct feed to mill, feed must be smooth and non-pulsating
Excessive Mill Vibration	1. Missing, broken, damaged or worn hammers	1. Replace damaged or broken hammers a. Replace all if worn
	2. Material build-up in rotor	2. Clear rotor of obstructions
	3. Foreign material in grinding chamber	3. Remove foreign material, inspect magnet and collection system
	4. Mill or motor shaft bent	4. Replace shaft and related parts
	5. Bad bearings	5. Replace bearings
	6. Hammers Locked under pin	6. Free hammers and check for damage
	7. Coupling misalignment	7. Readjust coupling
	8. Loose base bolts	8. Tighten bolts to original torques
	9. Improper hammer pattern	9. Install hammers correctly
	10. Worn screen clamps	10. Replace screen clamps
	11. Weak base structure	11. Provide adequate base structure
Excessive Wear	1. Product very abrasive	1. Contact your Prater representative
	2. Product too fine	2. Contact your Prater representative
	3. Feed rate too high	3. Adjust feed rate to proper level
	4. Product contaminated with foreign matter	4. Clean product

Bearing Failure	1. Improper coupling alignment	1. Align coupling properly
	2. Excessive grease in bearing	2. Clean and grease bearing or replace
	3. Inadequate lubrication	3. Grease bearing
	4. Foreign materials in bearings	4. Clean and grease bearing or replace
	5. Improper bearing alignment	5. Install bearing properly
	6. High vibration	6. Correct vibration problem
	7. High ambient temperature	7. Use high temperature grease

6.2 Mill Data

If problems cannot be diagnosed by using the Troubleshooting Guide, contact your Prater representative. Before calling for assistance, collect the data listed below. This information is essential to establishing the cause of problem conditions and determining solutions.

1. Size of mill
2. Perforations of screen
3. Motor horsepower
4. Idle amperage
5. Amperage with product load
6. Capacity at full load
7. Fineness analysis of feed and ground product – anticipated and actual – moisture content
8. Problem – requirements of product
9. Air flow and static pressure – before and after the mill
10. Blower motor amperage with and without product (if used)
11. RPM of mill
12. Direction of rotation and location of inlet diverter

Appendix A: Procedure for Determining the Number of Shims for an Evolution Rotor

1. Measure the thickness of each rotor end plate, intermediate plate, and center plate when received.
2. Add all the thickness together to get the total thickness
3. Using the table below, determine the number of shims required. **NOTE:** The required number of shims shown is for each spacer group NOT for the entire rotor. For example, for a 22” wide rotor where the plates measure 2.950” thick, (2) shims are required for each of the (6) spacer groups for a total of (12) center spacer shims and (48) or (96) bumper pin sleeve shims depending on if the rotor has (4) or (8) bumper pins.

Shim thickness is .018”

22" WIDE ROTOR

PLATE THICKNESS		# SHIMS
2.875	2.975	2
2.976	3.075	1
3.076	3.155	0

32" WIDE ROTOR

PLATE THICKNESS		# SHIMS
4.000	4.040	3
4.041	4.200	2
4.201	4.365	1
4.366	4.400	0

42" WIDE ROTOR

PLATE THICKNESS		# SHIMS
5.125	5.275	3
5.276	5.455	2
5.456	5.645	1

50" WIDE ROTOR

PLATE THICKNESS		# SHIMS
6.000	6.247	2
6.248	6.475	1

64" WIDE ROTOR

PLATE THICKNESS		# SHIMS
7.500	7.550	3
7.551	7.890	2
7.891	8.135	1

Table 1: Shim Quantities

4. After the rotor is assembled, measure the total length of the rotor from the outside of each end plate. Using the table below check to make sure that the rotor is with in the required lengths.

SIZE	MIN LENGTH	MAX LENGTH
22	21.375	21.625
32	31.875	32.125
42	42.375	42.625
50	49.375	49.625
64	63.375	63.625

Table 2: Minimum and Maximum Rotor Lengths

5. Should the rotor length not fall between the minimum and maximum lengths, shims should be added or removed.

Appendix B: Airflow Information

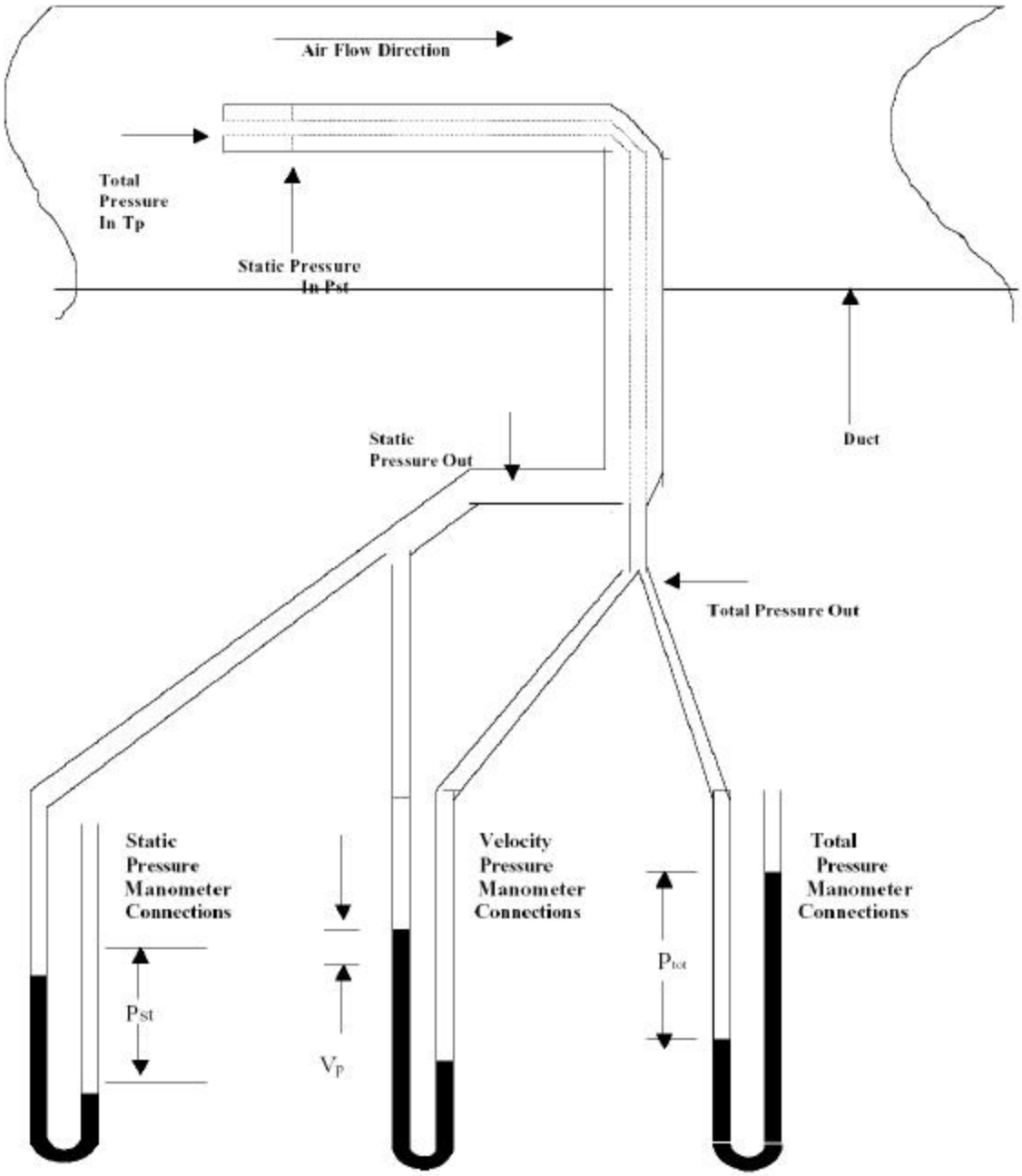

Figure B-1: Measuring air volume with a U-Tube Manometer and pitot tube

Duct OD (Inches)		4	5	6	8	10	12	14	16	18
Duct ID (Inches)		3.83	4.83	5.83	7.79	9.79	11.79	13.79	15.79	17.74
Duct Area (SQ. FT)		.081	.128	.187	.331	.523	.758	1.037	1.360	1.716
Velocity Pressure (Inches WC)	Air Speed (fpm)	Air Flow CFM (Cubic Feet per Minute)								
.10	1266	103	162	237	419	662	960	1313	1722	2172
.20	1791	145	229	335	593	937	1358	1857	2436	3073
.30	2194	178	281	410	726	1147	1663	2275	2984	3765
.40	2533	205	324	474	838	1325	1920	2627	3445	4347
.50	2832	229	362	530	937	1481	2147	2937	3852	4860
.60	3102	251	397	580	1027	1622	2351	3217	4219	5323
.70	3351	271	429	627	1109	1753	2540	3475	4557	5750
.80	3582	290	458	670	1186	1873	2715	3715	4872	6147
.90	3799	308	486	710	1257	1987	2880	3940	5167	6519
1.00	4005	324	513	749	1326	2095	3036	4153	5447	6873
1.10	4200	340	538	785	1390	2197	3184	4355	5712	7207
1.20	4387	355	562	820	1452	2294	3325	4549	5966	7528
1.30	4566	370	584	854	1511	2388	3461	4735	6210	7835
1.40	4739	384	607	886	1569	2478	3592	4914	6445	8132
1.50	4905	397	628	917	1624	2565	3718	5086	6671	8417
1.60	5066	410	648	947	1677	2650	3840	5253	6890	8693
1.70	5222	423	668	977	1728	2731	3958	5415	7102	8961
1.80	5373	435	688	1005	1778	2810	4073	5572	7307	9220
1.90	5521	447	707	1032	1827	2887	4185	5725	7509	9474
2.0	5664	459	725	1059	1875	2962	4293	5874	7703	9719
2.10	5804	470	743	1085	1921	3035	4399	6019	7893	9960
2.20	5940	481	760	1111	1966	3107	4503	6160	8078	10193
2.30	6074	492	777	1136	2010	3177	4604	6299	8261	10423
2.40	6205	503	794	1160	2054	3245	4703	6435	8439	10648

Table B-1: Air Volume Table

E-Mill Air Volume Requirements (CFM)

Model	Minimum	Maximum
40x22	2460	4920
40x32	3720	7440
40x42	4980	9960
40x50	5820	11640
40x64	7500	15000
45x22	2716	5433
45x32	4108	8215
45x42	5499	10998
45x50	6426	12853
45x64	8281	16563
54x22	3331	6663
54x32	5038	10075
54x42	6744	13488
54x50	7881	15763
54x64	10156	20313

Table B-2: recommended Air Volumes