INSTALLATION/OPERATION AND MAINTENANCE MANUAL

DO NOT OPERATE THIS MACHINE WITHOUT FIRST READING THIS MANUAL COMPLETELY

PRATER® AIRLOCKS • MILLS • SEPARATORS

MAC AIR CLASSIFIER

MODEL: MAC-0, MAC-1, MAC-2, MAC-3, MAC-4, MAC-5, MAC-6

SERIAL NUMBER: _____

PRATER® AIRLOCKS • MILLS • SEPARATORS

2 Sammons Court, Bolingbrook, IL 60440

Main: 630.759.9595 Fax: 630.759.6099

www.praterindustries.com info@praterindustries.com

Introduction

This manual contains complete instructions for the installation, operation, and maintenance of Prater equipment. Reliable operation, safety, and long service life of this equipment depends on 3 important considerations:

A. The care exercised during installation.
B. The quality and frequency of maintenance and periodic inspection.
C. A common sense approach to its operation.

Safety

Safety is basic, and must be considered through all facets of the operation and maintenance on any mechanical device. Using proper tools and methods can prevent serious accidents, which might result in serious injury to you or your fellow workers.

Proper operating procedures and safety precautions are listed throughout this manual. Study them carefully and follow instructions; insist that those working with you do the same. Almost all accidents are caused by someone's' carelessness or negligence

The precautions listed may not necessarily be all-inclusive and others might occur to the user, which are peculiar to a particular operation or industry. In addition, nearly all employers are now subject to the Federal Occupational Safety and Health Act of 1970, as amended, which require that an employer be kept abreast of the myriad of regulations, which will continue to be issued under its authority.

At all times – this equipment must be operated in accordance with the instructions and precautions in this manual and on the caution plates attached to the equipment. Only persons completely familiar with the instructions and precautions in this manual should thoroughly understand these instructions and precautions before attempting to operate this equipment

FAILURE TO OBSERVE AND FOLLOW THE PRECAUTIONS MAY RESULT IN SERIOUS PERSONAL INJURY OR PROPERTY DAMAGE.

SAFETY CHECKLIST

_ **ALWAYS** operate Rotary Airlock Feeder in accordance with instructions in this manual.
_ **ALWAYS** have a clear view of unit loading and unloading points and all safety devices.
_ **ALWAYS** allow unit to stop naturally. DO NOT attempt to artificially brake or slow motion of unit.
_ **KEEP** area around unit, drive and control station free of debris and obstacles.
_ **AVOID** poking or prodding into unit openings with bar or stick
_ **DO NOT** open inspection doors while unit is in motion.
_ **DO NOT** use the Rotary Airlock Feeder for processing of material other than the specific application for which it was designed.
_ **NEVER** work on unit and related components unless electric power and motor drive have been locked out and tagged. The National Electrical Code requires a manually operable disconnect switch located within sight of motor, or a controller disconnecting means capable of being locked if not within sight of the motor.
_ **NEVER** operate unit without guards and all safety devices in position and functioning.
_ **NEVER** put your hand near, on, or in the inlet or outlet of the airlock while it is operating or stalled.

TABLE OF CONTENTS

SECTION 4: MAINTENANCE

SECTION 5: TROUBLESHOOTING

SECTION 6: PARTS LIST

SECTION 1: INTRODUCTION

This section provides an overview of the manual and indicates safety procedures to be followed when installing and operating the REMA Classifier.

1.1 Manual Overview

This manual describes the installation requirements, procedures, and routine maintenance of Prater's REMA Classifier, Model #'s MAC-0, MAC-1, MAC-2, MAC-3, and MAC-4. Refer to this manual before beginning and during installation. Keep the manual available for future reference. The exploded view is located in the rear of the manual a foldout. The procedures throughout this manual refer to this foldout. The foldout can be left open while following the procedures.

Reliable operation, personnel safety, and long service life of this equipment depend on three important considerations:

- The care exercised during installation.
- The quality and frequency of maintenance and periodic inspections.
- A common sense approach to its operation.

To keep operating costs down and profits up, carefully follow the instructions listed for installation, operation, safety, and maintenance.

1.2 Receiving The Unit

When your shipment arrives, thoroughly inspect the REMA Classifier and all related equipment. In the event of shipping damage, note the problem on the bill of lading or freight bill and make sure you obtain the driver's signature for possible claim against delivering carrier.

The MAC-0, MAC-1 and MAC-2 Classifiers are usually shipped completely assembled. The classifiers are usually supplied with the sheaves mounted and the belt tightened (loose, when motor and base are factory supplied). The larger Classifiers are shipped in two pieces, separated into lower part and upper cone with rotor and drive.

NOTE It is the receiver's obligation to file claims for shipping damage.

1.3 Before Installation

Be sure the installation crew or millwrights are aware of installation requirements. If they have any questions or are unsure of proper procedures, clarify the matter to avoid improper installation. Section 2 of this manual covers important steps to ensure safe, vibration-free installation. Personnel responsible for installation should be familiar with these procedures.

In preparing for installation, make sure you provide for all appropriate safety devices. Prater Industries, Inc. does not install your machine. It is your responsibility to provide lockout switches, guards, and other safety devices and safety procedures to protect the machine operator or maintenance personnel.

1.4 Before Operation

Make sure operating personnel are well-trained in procedures for operating and maintaining the REMA Classifier. In particular, make sure they understand the essential safety precautions described in Section 1.6

1.5 Safety Notices

Basic safety must be considered through all facets of operation and maintenance on any mechanical device. Using proper tools and methods will help prevent accidents and serious injury to you and your fellow workers.

Proper operating procedures and safety precautions are listed throughout this manual. Study them carefully and follow instructions; insist that those working with you do the same. Almost all accidents are caused by someone's carelessness or negligence.

Examples of the three types of safety notices (Warnings, Cautions and Notes) in this manual are listed below:

WARNING **INDICATES A SITUATION IN WHICH PERSONAL INJURY MAY OCCUR.**

CAUTION **INDICATES A SITUATION IN WHICH DAMAGE TO EQUIPMENT OR MATERIAL MAY OCCUR.**

NOTE Provides helpful information for proper operation of the REMA Classifier.

1.6 Safety Precautions

WARNING **OPERATORS MUST BE INSTRUCTED NOT TO PUT HANDS, FINGERS OR OTHER FOREIGN OBJECTS IN THE MACHINE, AND NOT TO REMOVE ANY COVER, DOOR, HATCH OR OTHER PROTECTIVE DEVICE. COVERS, DOORS, HATCHES AND OTHER PROTECTIVE DEVICES ARE PLACED ON THIS MACHINE FOR THE SAFETY OF THE OPERATOR. ANY ATTEMPT TO DEFEAT THESE DEVICES COULD RESULT IN SERIOUS INJURY.**

WARNING **ELECTRICAL SERVICE TO THE MACHINE MUST BE LOCKED OUT WHILE ANY REPAIRS OR ADJUSTMENTS ARE BEING MADE OR WHILE ANY COVER, DOOR, HATCH OR OTHER PROTECTIVE DEVICE IS NOT IN PLACE.**

The precautions listed in this manual may not be all-inclusive and others might occur to you which are peculiar to your operation or industry. In addition, nearly all employers are now subject to the Federal Occupational Safety and Health Act of 1970, as amended, which requires that an employer be kept abreast of the myriad of regulations which will continue to be issued under its authority.

The REMA Classifier must always be operated in accordance with the instructions and precautions in this manual and on the caution plates attached to the equipment. Only workers completely familiar with the instructions and precautions in this manual should be permitted to operate the unit. The operator should thoroughly understand these instructions and precautions before attempting to operate this equipment.

Illustration 1-1 is a checklist of safety precautions and proper operating procedures. Failure to observe and follow the precautions may result in serious personal injury or property damage.

Safety Checklist

- ✔ **ALWAYS** operate REMA Classifier in accordance with instructions in this manual.
- ✔ **DO NOT** open inspection doors while unit is in motion.
- ✔ **NEVER** work on unit and related components unless electric power and motor drive have been locked out and tagged. The National Electrical Code requires a manually operable disconnect switch located within sight of motor, or a controller disconnecting means capable of being locked if not within sight of the motor.
- ✔ **DO NOT** use the REMA Classifier for processing of material other than the specific application for which it was designed.
- ✔ **AVOID** poking or prodding into unit openings with bar or stick.
- ✔ **ALWAYS** have a clear view of unit loading and unloading points and all safety devices.
- ✔ **KEEP** area around unit, drive and control station free of debris and obstacles.
- ✔ **NEVER** operate unit without guards and all safety devices in position and functioning.
- ✔ **ALWAYS** allow unit to stop naturally. DO NOT attempt to artificially brake or slow motion of unit.

Illustration 1-1
REMA Classifier Safety Precautions

Illustration 1-2 shows the safety labels used on the REMA Classifier. These labels are important for worker information and must not be removed from the unit.

Illustration 1-2
Safety Labels

1.7 General Information

Classifying is the splitting of particulate material of a mixed particle size into two fractions at a predetermined cut point, by the use of air power to modify the particle size distribution.

REMA Classifiers are designed to separate materials into two fractions, especially materials containing high amount of ultra fines or materials that are sticky or contain fat.

The main purpose is to take out any course material above a given particle size. The machine, however, is also used for "dedusting" operations, taking out all the fines below a given particle size.

1.8 Field of Operation

The Prater REMA Air Classifier type MAC (Micro Aerosplit Classifier) can be used for a wide range of applications in the field of fine and very fine particle separation.

The REMA Classifiers accurately separate large volumes of particles at selected particle sizes from 1 to 150 micron (100 mesh) with capacities up to several tons per hour. Such a separation point is called a cut point.

Products processed include chemicals, pharmaceuticals, food stuffs, flour, organic and inorganic pigments and resins.

1.9 Machine Design

NOTE This paragraph refers to Illustration 6-1 in the rear of the manual.

The REMA Classifier consists basically of a cyclone type housing containing the classifier rotor. The rotor is driven by an electrical motor (23). The speed is adjustable usually by means of an adjustable belt drive.

The machine is fed tangentially into housing (47) around the rotor. The lower part of the classifier is built like a cyclone and receives the coarse material after it was rejected by the rotor.

Housing (44) also has the secondary air inlet which includes a butterfly valve to control the air volume. This secondary air will help force any fines, mixed in with the coarse, back up to the rotor and into the fines discharge.

The coarse material is discharged through an airlock attached to the bottom of housing (44). The fines discharge (24) is arranged tangentially above housing (47).

The housing is a solidly welded construction, with a bolted on bearing housing (1) which can be exchanged completely in one piece.

There are up to four doors in the hosing at different levels for cleaning and inspection purposes.

CAUTION **THESE DOORS SHOULD NOT BE OPENED WHEN THE UNIT IS OPERATING.**

The ball bearings (7) are protected through elaborate labyrinth seals.

The two disc rotor is carefully, dynamically balanced. The blades (14) are made out of tool steel and are positioned in grooves on both sides and kept there by retaining rings (10 and 13).

1.10 Operating Principle

NOTE This paragraph refers to Illustration 1-3.

The REMA Classifier consists of a separating rotor (2) driven by an electrical motor (6) through a variable speed drive. The separating rotor is contained in a fabricated casing specifically designed to give a high separating efficiency and product yield.

Due to the design of the casing and the rotation of the multi-vaned rotor (2), a spiralling air system is set up and classification of the particulate material into two size fractions begins. As the particles approach the rotor, they are subjected to a centrifugal force which may be several hundred times the force of gravity

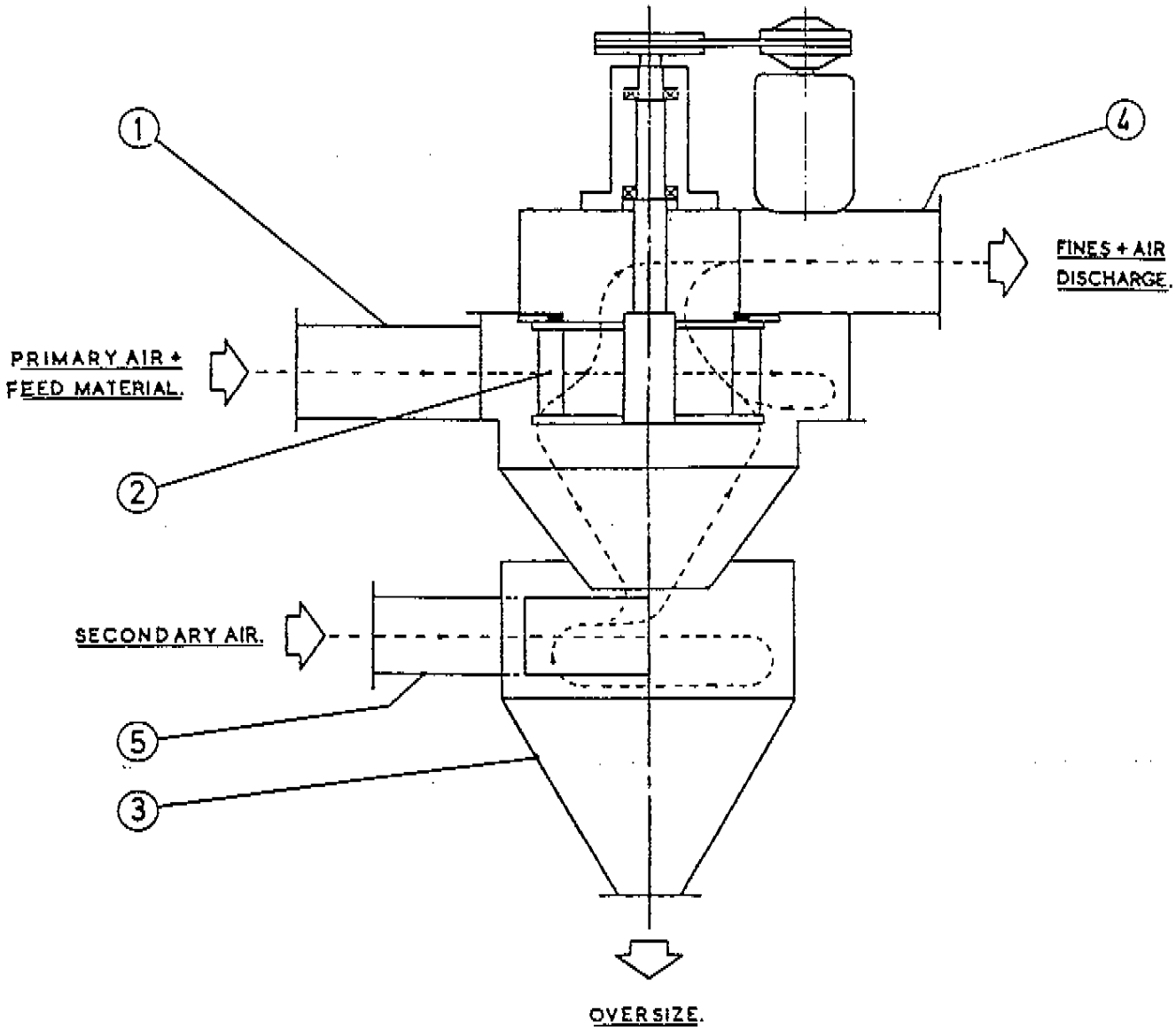

Illustration 1-3
Sectional Diagram

depending on the speed of the rotor. This force over comes or is overcome by the centripetal friction drag force exerted on the particles by the air as it spirals inwards through the rotor vanes.

At the cut point, these two opposing forces are in equilibrium. The centrifugal force predominates on the particles above the cut size. These particles fly away from the rotor to impinge on the casing and descend to the oversize cyclone (3). The frictional drag force has greater influence on particles below the cut size. These particles are conveyed inward through the rotor, finally leave the machine through duct (4).

The efficiency of separation of any classifier depends largely on its ability to completely disperse each individual particle into the separating zone. This becomes increasingly difficult as the cut size becomes smaller. Fine particles tend to adhere to one another and as a result are classified as oversize or rejected particles. To overcome this tendency a secondary air system has been built into the REMA Classifier.

The additional air stream is induced tangentially through duct (5). This air stream increases the residence time of particles in the separating zone and also sifts the rejected material as it descends. Fine particles are liberated and returned to the separating rotor. A simple butterfly valve enables the volume of secondary air to be controlled to the optimum for any desired cut point or feed material.

1.11 Specifications

	Dim.	MAC-0	MAC-1	MAC-2	MAC-3	MAC-4
Rotor Dia (Blades)	Inch	8-1/8	11-13/16	17-23/32	23-5/8	29-1/2
Rotor Height	Inch	3.64	5.19	8.05	10.63	13.14
No. of Blades		24	24	30	36	60
Speed Max.	RPM	10,600	4,500	3,500	2,200	1,900
Speed Min.	RPM	450	425	400	350	275
Motor	HP	2/3	5/7.5	10/15	15/20	20
	RPM	3600	1800	1200	1200	1200
Max. Air Flow	CFM	700	1500	3150	6000	8750
Min. Air Flow	CFM	500	1200	2700	4800	7500
Weights:						
Rotor	Lbs.	17.6	42	112	280	435
Machine Without Mill Motor	Lbs.	605	925	1360	2550	4470

NOTES

SECTION 2: INSTALLATION

2.1 Introduction

Proper installation of Prater's REMA Classifier is critical for efficient and productive operation. The proper site preparation and placement of the REMA Classifier and related equipment will insure that the classifier operates safely and to its fullest capacity.

The following are important considerations in REMA Classifier installation:

1. **Location.** Make sure the operating location will provide strong, vibration-free base support and allow easy access to all parts of the REMA Classifier. See Section 2.2.
2. **Lifting.** Care should be taken when lifting the machine since the bulk of the weight occurs in the bearing housing and drive motor arrangement. As a result, the center of gravity occurs just above the base of the bearing housing. Lifting lugs are provided on top on the housing. Weights for lifting purposes are listed in Section 1.10. Care should be taken when lifting the machine to prevent damage to the classifier drive.
3. **Leveling.** The REMA Classifier should be arranged with the main shaft as near vertical as possible. Section 2.3 and 2.4 explain how to check for proper leveling and prevention of vibration damage during operation.
4. **Drive.** The REMA Classifier is always supplied with pulley (28, Illustration 6-1) mounted and the motor pulley and V-belts supplied loose (except when motor and base are factory supplied). Section 2.5 explains proper drive installation.

2.2 Location

There are two essential considerations for the REMA Classifier location: the foundation below the machine and the free clearance around it.

2.2.1 Foundation

The REMA Classifier must be supported in a vibration free location.

2.2.2 Clearance

There should be sufficient open space in all directions around the REMA Classifier to allow access for maintenance operations.

2.3 Leveling

The classifier is supplied with four equally spaced support brackets located on the cone section of the body center. Each bracket has holes for bolting to your structure and the classifier should be arranged with the main shaft as near vertical as possible.

To correct level:

1. Insert shims for proper alignment.
2. Re-check level.
3. Tighten all fasteners.

2.4 Vibration

The Prater REMA Classifier is constructed to run without noticeable vibration. Vibration indicates a problem that must be found and corrected immediately. Left uncorrected, vibration will cause the following:

- REMA Classifier damage
- Structural damage

There are several conditions that cause vibration, including:

- Uneven base (See Section 2.3)
- Loose motor fasteners
- Defective motor or REMA Classifier bearings (See Section 5)
- Other equipment transferring vibration thru contact with the REMA Classifier.
- Worn, missing or broken rotor blades.

2.5 Drive

The standard drive arrangement for the REMA Classifier is a fixed center mechanically variable speed belt drive. Alternative drive arrangements are possible including a frequency controlled unit. For details and maintenance of the specific type fitted to the machine, refer to Appendix B.

The classifier drive is mounted to the top cone on the machine. It should be inspected to see that both pulleys are properly aligned.

The maximum permissible RPM of the classifier rotors are listed in Section 1.10. Under no circumstances should these speeds be exceeded. Before running the classifier up to speed, a check should be made to ensure that the correct pulleys are being used.

Alignment of pulleys after motor is installed is very important because of the high rotational speeds. Improper alignment causes rapid bearing failure on motor and/or REMA Classifier.

Proper belt tensioning is very important. The belts are a matched set and require being tight enough so that under full load, slippage does not occur. The belts should be inspected frequently during the first few days of operation. The new belts have a tendency to stretch, causing them to loosen up and squeal. (See any standard belt manufacturer's catalogue for tensioning specifications.)

A V-belt guard will be provided with all REMA Classifier, unless the customer requests, in writing, that the guard need not be provided. The guard is built to rigid specifications to our standard center distances and locations. "OSHA" requirements mandate guarding all drives, and the customer MUST supply an approved design guard if he requests Prater Companies not to supply one. Exposed V-belts are a HAZARDOUS condition.

2.6 Feeding

After the REMA Classifier is mounted in place, the product inlet (1, Illustration 1-3) must be connected to a device that will give a uniform controlled feed rate. IT IS ESSENTIAL THAT THE FEED BE CONTROLLED in order to prevent overfeed, or uncontrolled pulsations which can overload the REMA Classifier. Any device, such as a slide gate, rotary feeder, vibrating trap feeder, screw conveyor, etc., may be used, as long as it provides a uniform controlled feed. The feeding device should be supported from the building or other static structure. DO NOT support feeder with the product inlet.

Establishing feed rate by averaging total feed over a period of time may allow non-uniform feed. There is no guarantee that short feeding cycles may not be too high or provide erratic feed during the run.

2.7 Secondary Air Supply

To enable maximum recovery of the desired product to be achieved, the REMA Classifier employs a secondary air system. In general, the volume of secondary air should be approximately 25% of the total airflow. However, where the cut is coarse or if the material being handled has a strong tendency to agglomerate, increased air volume may have an advantage.

Excessive secondary air, however, should be avoided since this may result in overloading of the drive motor.

It is recommended that an ammeter be fitted to the drive motor circuit to indicate load on the motor.

2.8 Required Air Flow

Table 2-1 lists the REMA Classifier models matched with motor speed in RPMs and required air flow volumes in cubic feet per minute.

Table 2-1. Minimum Air Flows

MODEL	RPM	CFM
MAC-0	3600	650
MAC-1	1800	1350
MAC-2	1200	2900
MAC-3	1200	5900
MAC-4	1200	7750

2.9 Electrical Requirements

Install connections to meet all national and local electrical codes. Consult with your local power company before installation.

NOTE The National Electrical Code requires a manually operable disconnect switch located within sight of the motor, or a controller disconnecting means capable of being locked if not within sight of the motor.

Effective October 31, 1989, OSHA requires that all energy disconnect devices be capable of accepting a lock-out/tag-out device. This requirement is mandatory for any new equipment being installed or for replacement, repair or modification of older equipment. The employer must:

- Produce a written program explaining the procedure
- Conduct an annual inspection to verify compliance
- Provide documented employee training in these procedures

The Prater REMA Classifier are normally started with "across the line" starters. Reduced voltage compensating starters may also be used.

2.9.1 Electrical Interlocking

As a general guide, the last piece of process equipment is started first with subsequent starts working up the line to the feeder being the last item started.

CAUTION

A TIME DELAY IS ALWAYS REQUIRED BETWEEN START-UP OF THE REMA CLASSIFIER AND START UP OF THE FEEDER, TO ALLOW REMA CLASSIFIER TO REACH FULL OPERATING SPEED BEFORE PRODUCT IS INTRODUCED.

ON SHUT DOWN, A TIME DELAY IS REQUIRED TO ASSURE THAT ALL OF THE PRODUCT HAS CLEARED THE REMA CLASSIFIER.

2.10 Unit Check

After installation is complete, carefully inspect all work before installation crew leaves to see that all instructions have been properly followed.

2.11 Adjustments

To achieve the most efficient performance with the REMA Classifier through all possible adjustments it is important to remember how classification is achieved.

The following adjustment will influence the classification results:

SPEED	The rotor speed can be set to all speeds within the range shown in Section 1.10. Higher Speed: Finer Product Lower Speed: Coarser Product
SECONDARY AIR	Adjust the secondary air supply as follows: Higher Secondary Air: Coarser Product and Higher Yield Lower Secondary Air: Finer Product and Lower Yield
FEED RATE	Adjust the feed rate as follows: Higher Feed Rate: Coarser Product and Higher Yield Lower Feed Rate: Finer Product and Lower Yield
ROTOR BLADES	Blades may be removed for higher yield. Refer to Section 4.3. All Blades: Finer Product and Lower Yield Less Blades: Coarser Product and Higher Yield

NOTES

SECTION 3: OPERATION

3.1 Introduction

Pre-run inspections and safety checks throughout this section insure that the REMA Classifier is in proper operating condition. Other aspects of operation covered in this section include: start-up and shutdown sequences.

3.2 Pre-Run Inspection

Before attempting to run the REMA Classifier even to check rotation, perform the following inspection:

1. Remove access doors (43, 45, and 46, Illustration 6-1).
2. Thoroughly inspect all internal components.
3. Turn the rotor assembly by hand to see that it turns freely.
4. Check that the separating rotor blades (14) are all mounted securely in their milled slots in the correct position.
5. Install access doors (43, 45, and 46).

3.3 Safety Check-up

Before starting the REMA Classifier, check the following:

- The inside of the REMA Classifier for foreign material, i.e., nuts, bolts, wire, rags, paper, wood, tools.
- That the rotor assembly moves freely and not hitting surrounding parts.
- All sheaves are aligned properly.
- That all guards are mounted and secure.
- That all inspection doors are installed.
- That all electrical starting equipment, meters, disconnect switches, and other control devices are clearly visible and readily accessible to the operator.
- Check the rotor rotation (See Section 3.4).

3.4 Rotor Rotation

Check each motor as it starts for proper direction of rotation before proceeding to start the next motor. Looking at the REMA Classifier from the top, the rotor should turn clockwise. Do not Reverse Rotation.

3.5 Start-Up Sequence

This start-up sequence is intended as a general guide. The start-up sequence you use will depend on your specific operation and any unique characteristics of your installation.

As a general guide to electrical interlocking, you turn on equipment in reverse order from product flow. The final piece of equipment to be started should be the product feeder.

CAUTION

A TIME DELAY IS ALWAYS REQUIRED BETWEEN START-UP OF THE REMA CLASSIFIER AND START UP OF THE FEEDER, TO ALLOW REMA CLASSIFIER TO REACH FULL OPERATING SPEED BEFORE PRODUCT IS INTRODUCED.

ON SHUT DOWN, A TIME DELAY IS REQUIRED TO ASSURE THAT ALL OF THE PRODUCT HAS CLEARED THE REMA CLASSIFIER.

Here is a start-up check list:

1. Start rotary valve under dust collector.
2. Start main suction fan.
3. Start filter cleaning cycle.
4. Start classifier drive motor and check whether it is running at required RPM.
5. Check airflow (See Appendix A).
6. Start feeder at low rate until ammeter indicates steady load.
7. Increase feed as necessary.
8. Check that airflow is maintained under load.

If all of the above have been properly checked, begin a product feed into the system at a slow rate, always less than 50% of full rated capacity. After the system

has operated for awhile and seems stable, check the finished product to determine that the classification is what you require.

If product is good, slowly increase the feed to its maximum load condition (AMPERAGE). The maximum load for your motor is stamped on the motor name plate (USE AMPERAGE LISTED FOR VOLTAGE BEING USED). Load reading on the ammeter should never exceed this value. Upon reaching the maximum loading condition, recheck the fineness and capacity as required.

3.6 Shut-Down

1. Stop feeder and allow system to clean for three minutes.
2. Stop the classifier drive motor and allow to slow down.
3. Stop filter cleaning cycle.
4. Stop main suction fan after two minutes.
5. Stop rotary valves after classifier has come to a complete standstill

SECTION 4: MAINTENANCE

4.1 Introduction

The REMA Classifier is designed to operate with little maintenance. Routine inspections and regular maintenance will identify any worn or broken parts before they become a problem. Worn or broken parts are damaging to the REMA Classifier and its output.

WARNING **DO NOT OPEN REMA CLASSIFIER OR ATTEMPT ANY FORM OF INSPECTION UNTIL THE REMA CLASSIFIER HAS COME TO A COMPLETE STOP AND THE ELECTRICAL DISCONNECT HAS BEEN LOCKED IN THE OPEN POSITION.**

4.2 Routine Inspection

NOTE This paragraph refers to Illustration 6-1 in the rear of the manual.

High speed rotating equipment requires regular routine preventative maintenance procedures.

Regular inspection of the rotor blades (14) should be carried out particularly where abrasive materials are being processed. Any worn parts should be replaced.

NOTE It is important that the rotor blades are replaced once the outer edge thickness of a blade is reduced to 0.04 inch.

The blade retaining rings (10) and (13) should be inspected for signs of wear and replaced if necessary.

The classifying rotor is statically and dynamically balanced to a high standard to ensure smooth vibration-free running. Should increased vibration develop, immediately stop the machine (See Section 5, TROUBLESHOOTING).

Any possible material build up in both the upper and the lower cone should be removed.

4.3 Rotor Blade Removal

In order that the full range of the REMA Classifier can be exploited, the separating rotor blades (14, Illustration 6-1) are made detachable. In general, the classifier will be operated with a full complement of blades fitted. Where product requirements are not so tight, a reduced number of blades can be used to yield a higher throughput. It is possible to operate the classifier with a reduced number of blades; however, care should be taken to ensure that the blades are always symmetrically mounted in order to maintain balance.

To remove the blades refer to Section 4.5.

4.4 Rotor Assembly Removal

Access to the interior of the classifier for routine inspection is gained through the access doors (43, 45, and 46, Illustration 6-1). Should the eventuality arise for a major overhaul, the complete rotor assembly together with the top section of the casing can be lifted clear as follows:

1. Turn off the REMA Classifier and allow the rotor to come to a complete stop.
2. Lock out electrical power to the REMA Classifier.
3. Attach a suitable lifting device to the lifting lugs located on top on the housing (24).
4. Remove screws (42) and lift the complete rotor assembly together with the top section of the casing.

4.5 Rotor Blade Replacement

WARNING **DO NOT OPEN REMA CLASSIFIER OR ATTEMPT ANY FORM OF INSPECTION UNTIL THE REMA CLASSIFIER HAS COME TO A COMPLETE STOP AND THE ELECTRICAL DISCONNECT HAS BEEN LOCKED IN THE OPEN POSITION.**

1. Turn off the REMA Classifier and allow the rotor to come to a complete stop.
2. Lock out electrical power to the REMA Classifier.
3. Remove the complete rotor assembly as described in Section 4.4.

NOTE The rotor blades are located in milled slots and are retained in position by six equally spaced countersunk head set screws.

4. Locate the six screws (31, Illustration 6-1) on the under side of bottom carrier ring (12). Loosen these screws to allow the carrier ring to fall approximately 9/16".
5. Pivot the bottom of the blade (14) outward and finally lowering the blade from the slots in the top retaining ring (10).

NOTE When replacing damaged or worn blades with new blades, it is necessary to also replace the blade directly opposite the worn blade. This will keep the rotor in balance.

NOTE If one blade is cracked, it is recommended that all blades be "MAGNA FLUXED" to detect any unseen hairline cracks. Blades with these imperfections will probably break and cause additional blade failures and other equipment damage. Used blades which show no cracks or imperfections after "MAGNA FLUXING" are safe to reinstall.

7. Install new blades.
8. Secure the bottom carrier ring (12) with the six screws (31). Be sure screws (31) are tightened down hard before the rotor is run again.
9. Reinstall the complete rotating assembly.

4.6 Lubrication

All bearings should be given (at intervals) supplies of grease, which should be of good quality and absolutely free from impurities or foreign matter. Four Alemite grease nipples are fitted to the bearing lubrication points.

The recommended lubricant is Shell Alvania No. 2 or 3 and 1/2 ounce (14 grams) should be added to each bearing every 500 running hours.

The upper and lower grease nipples on the bearing housing feed the bearing seals. These should be lubricated at similar intervals to the bearings. The variable speed pulleys are permanently lubricated and require no further lubrication.

4.7 Bearing Assembly

NOTE This paragraph refers to Illustration 6-1 in the rear of the manual and Illustration 4-1.

4.7.1 Disassembly

WARNING **DO NOT OPEN REMA CLASSIFIER OR ATTEMPT ANY FORM OF INSPECTION UNTIL THE REMA CLASSIFIER HAS COME TO A COMPLETE STOP AND THE ELECTRICAL DISCONNECT HAS BEEN LOCKED IN THE OPEN POSITION.**

1. Turn off the REMA Classifier and allow the rotor to come to a complete stop.
2. Lock out electrical power to the REMA Classifier.
3. Remove the complete rotor assembly as described in Section 4.4.
4. Remove the belt guard (26), belt (27), and pulley (28) from shaft (2).
5. Unscrew rotor jam nuts (19) and pull rotor down from shaft. Rotor weight is shown in Section 1.10.

CAUTION **PROVIDE SUPPORT FOR ROTOR.**

6. Remove drive key (15) from shaft (2).
7. Release lock bolt (16) and remove adjustable set collar (17) from shaft (2).
8. Remove end cap (3) and end cover (4).
9. Shaft (2) can now be removed from bearing housing (1) by light blows on the rotor end of the shaft. A "lead", soft faced hammer or hardwood should be used to protect the shaft.

NOTE The upper ball bearing (7) will remain of shaft (2), the lower ball bearing (7) will remain in housing (1).

10. Grease retainers (5 and 6) can now be gently tapped out of housing (1).
11. Remove lower ball bearing (7) and grease retainer (6) from housing (1).
12. Remove upper ball bearing (7) from shaft (2).

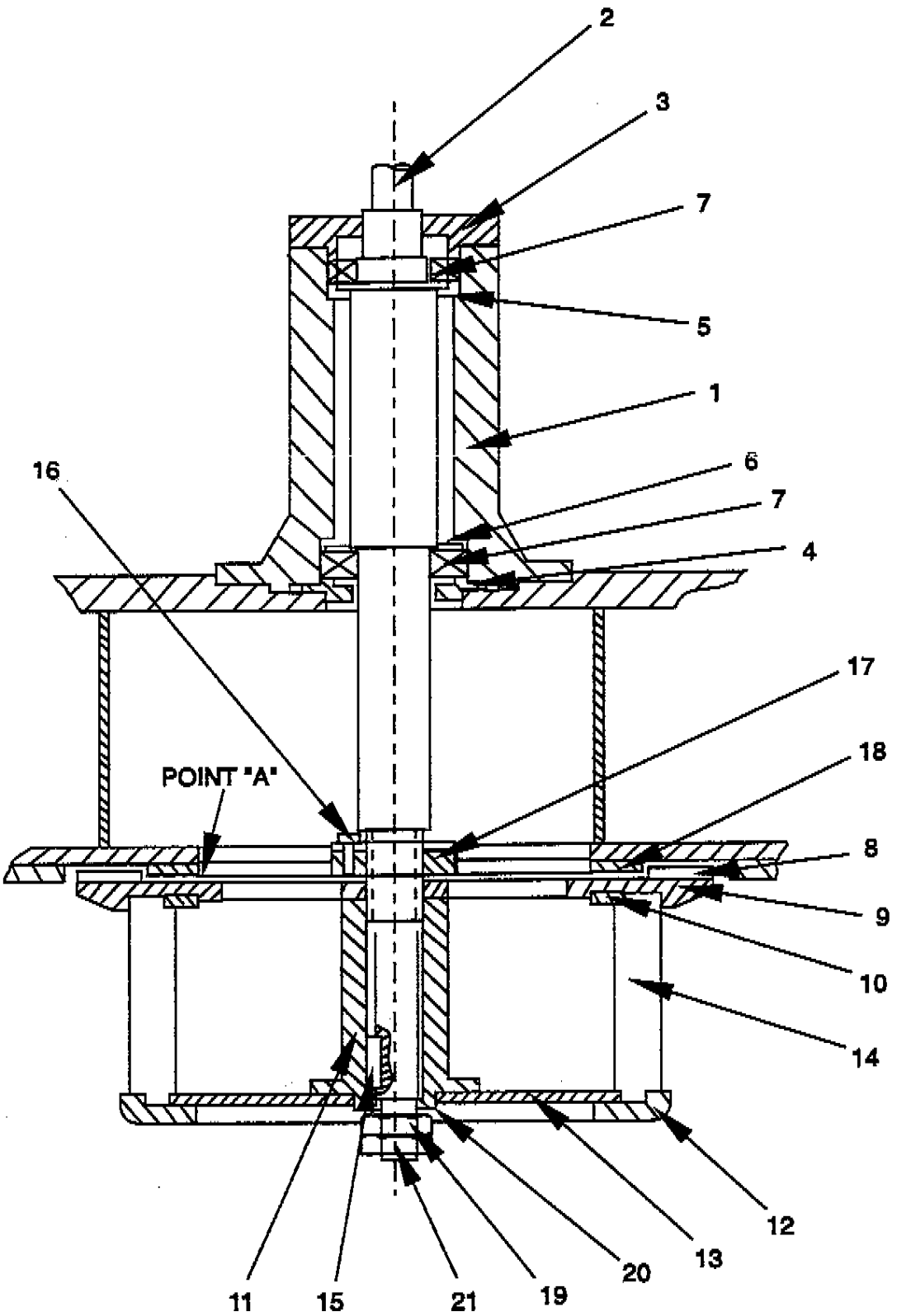

Illustration 4-1
Rotor Clearance

13. Remove all traces of old grease from the various components using a suitable solvent and dry thoroughly.
14. After cleaning cast parts, lightly coat with grease to protect from corrosion.
15. New grease of the correct quality should be worked into the ball bearing by hand until the spaces between the balls and the cage are completely filled. The grease should extend to the outer faces of the bearing.
16. Reinstall shaft (2) with bearings (7) as described in Section 4.7.2.

4.7.2 Reassembly

1. Install grease retainer (6) and pack with grease.
2. Install lower bearing (7) on shaft after packing with grease.
3. Install shaft (2) in bearing housing (1) by light blows on the sheave end of the shaft. A "lead", soft faced hammer or hardwood should be used to protect the shaft.
4. Install end cover (4) and secure with washers (36) and screws (35).
5. Install grease retainer (5) in housing (1) and pack with grease.
6. Install upper ball bearing (7) in bearing housing (1) after packing with grease.
7. Install end cap (3) and secure with washers (36) and screws (35).

NOTE Clearance between end cap (3) and bearing housing (1) must be 0.004 to 0.005 inch. Machining may be required to maintain this dimension if installing a new end cap (3).

8. Install adjustable collar (17) and secure with lock bolt (16).
9. Install drive key (15) on shaft (2).
10. Position rotor on shaft (2) and secure with jam nuts (19).
11. Install pulley (28) on shaft (2) and secure with screw (37).
12. Install and tension the drive belt (27) as described in Section 4.8.
13. Install drive guard (26).
14. Reinstall the complete rotating assembly.

4.8 Belt Tension

WARNING **DO NOT OPEN REMA CLASSIFIER OR ATTEMPT ANY FORM OF INSPECTION UNTIL THE REMA CLASSIFIER HAS COME TO A COMPLETE STOP AND THE ELECTRICAL DISCONNECT HAS BEEN LOCKED IN THE OPEN POSITION.**

1. Turn off the REMA Classifier and allow the rotor to come to a complete stop.
2. Lock out electrical power to the REMA Classifier.
3. Remove drive guard (26).
4. Press firmly on the mid-point of belt (27) and measure the belt deflection. Deflection should be 1/4" or less.
5. If deflection is more than 1/4", loosen the motor mounting bolts (38), tighten the belt and tighten the mounting bolts.
6. Install the drive guard (26).

4.9 Rotor Clearance

The normal seal clearance (Point A, Illustration 4-1) is 0.063 in. (1.5 mm). This clearance has been selected for use with most average products. There are materials which when operating at very fine cut points may require a reduced clearance. To adjust this clearance follow instruction in Sections 4.9.1 and 4.9.2 carefully.

On larger units MAC-3 and up, the large size and weight of the rotor causes a minor downward deflection at the periphery of the rotor while it is at rest. As the rotor speed is raised, centrifugal forces overcome the effects of gravity and the deflection reverses until at approximately 1500 RPM the rotor is stable with all the deflection eliminated. On a MAC-3 this deflection is 0.005 to 0.006 inches and this movement must be included in your gap setting. For example, when adjusting seal gap for 0.020 running clearance, it is necessary to set the gap at 0.026 inch. The upward movement as the rotor reaches operating speed will reduce this clearance to the desired 0.020 inch clearance. The absolute minimum running clearance which

should be attempted is 0.005 inch, or at rest clearance of 0.011 inch.

4.9.1 Decrease Clearance

1. Loosen lock bolt (16, Illustration 4-1) on adjustable collar (17).
2. Turn adjustable collar (17) counter-clockwise to raise the collar off top spider ring (9).
3. Select four shims the desired thickness plus 0.006 inch. Insert each shim 90 degrees apart at Point A, Illustration 4-1.
4. While holding nut (19) with a wrench, loosen nut (21) slightly.
5. Slowly turn nut (19) counter-clockwise to raise the rotor gently until it just touches one or more of the four shims.

NOTE Try pulling the tightest shim. There should be a very light resistance when the spacing is correct.

6. Turn adjustable collar (17) clockwise until it firmly touches the top of spider ring (9).
7. Tighten lock bolt (16) and remove the four shims.
8. Snug up nut (19) against the bottom of retaining ring (13). While holding nut (19) with one wrench, tighten nut (21) against nut (19).
9. Using a feeler gauge, recheck clearance all around to make certain clearances have not changed.

4.9.2 Increase Clearance

1. While holding nut (19, Illustration 4-1) with a wrench, loosen nut (21) one quarter turn.
2. Turn nut (19) clockwise one quarter turn to slowly lower the rotor.
3. Select four shims the desired thickness plus 0.006 inch. Insert each shim 90 degrees apart at Point A, Illustration 4-1.
4. Slowly turn nut (19) counter-clockwise to raise the rotor gently until it just touches one or more of the four shims.

NOTE Try pulling the tightest shim. There should be a very light resistance when the spacing is correct.

5. Loosen lock bolt (16) on adjustable collar (17).
6. Turn adjustable collar (17) clockwise to until it firmly touches the top of spider ring (9).
7. Tighten lock bolt (16) and remove the four shims.
8. Snug up nut (19) against the bottom of retaining ring (13). While holding nut (19) with one wrench, tighten nut (21) against nut (19).
9. Using a feeler gauge, recheck clearance all around to make certain clearances have not changed.

NOTES

SECTION 5: TROUBLESHOOTING

This section covers the more common day-to-day operating problems for the Prater REMA Classifier. Possible causes are listed along with their suggested solutions.

5.1 Introduction

This section is offered as a general guide to analyzing problems. If after reviewing this section you have not identified your problem, contact a Prater representative for further assistance.

5.2 Start-Up Problems

Prater equipment is made of high quality materials and assembled by skilled workers who take pride in their work. However, even on the best equipment there can still be start-up or operational problems.

If trouble occurs, please check the following:

1. Did the unit receive any damage during shipment or installation? Sometimes there is hidden damage or internals can shift due to a sudden jar, thus causing drive misalignment or possible parts rubbing internally.
2. Check area where unit is installed to be sure it is level and provides a proper vibration-free foundation.
3. Be sure that there is not an excessive weight supported on top of or suspended from the REMA Classifier.
4. Check to see that material to be handled can flow freely to and out of the unit.
5. To avoid electrical problems, a qualified electrician should verify that the proper power source is connected and correctly wired to motor being used.

   If it is thought that there may be a problem with a motor or other apparatus sold by Prater, call Prater Customer Service Department.

5.3 Excessive Vibration

Excessive vibration is an indication that something has changed and needs correction. Stop the REMA Classifier and inspect.

WARNING

DO NOT OPEN THE REMA CLASSIFIER OR ATTEMPT ANY FORM OF INSPECTION UNTIL THE REMA CLASSIFIER HAS STOPPED ALL MOTION AND THE ELECTRICAL DISCONNECT HAS BEEN PLACED IN THE OPEN POSITION AND LOCKED WITH A KEY LOCK. NEVER ATTEMPT TO ASSIST THE REMA CLASSIFIER TO SLOW DOWN BY ANY MEANS, MECHANICAL OR OTHERWISE.

5.4 Troubleshooting Chart

Symptom	Possible Cause	Suggested Solution
Product too coarse.	1. Speed too low.	Change speed with the adjustable belt drive.
	2. Secondary air too high.	Adjust the butterfly valve.
	3. Worn rotor blades.	Replace blades.
	4. Improper rotor clearance.	Adjust the rotor.
	5. Total system air flow too high.	Decrease system air flow.
	6. Feed rate too high.	Decrease the feed rate.
	7. Material changed.	1. Check the moisture/fat content. 2. Check if the feed is too coarse.
Product too fine.	1. Speed too high.	Change speed with the adjustable belt drive.
	2. Secondary air too low.	Adjust the butterfly valve.
	3. Total system airflow too low.	Increase system air flow.
	4. Build up in dust collector.	Check and clean dust collector.
	5. System blower not working properly.	Check system blower.
	6. Build up in duct work.	Check and clean duct work.
	7. Feed rate too low.	Increase the feed rate.
	8. Material changed.	1. Check the moisture/fat content. 2. Check if the feed is too fine.
Capacity too low.	1. Too low cut point.	Adjust.
	2. Secondary air too low.	Adjust the butterfly valve.
	3. Material too coarse or too fine.	Check material size.
	4. Feed rate too high.	Decrease feed rate.
Insufficient yield.	1. Secondary air too low.	Adjust the butterfly valve.
	2. Feed rate too low.	Increase feed rate.
	3. Total system air flow too low.	Increase system air flow.
	4. Material too coarse.	Check material size.

5.4 Troubleshooting Chart (Continued)

Symptom	Possible Cause	Suggested Solution
Bearings run noisy, or get hot.	1. Improper pulley alignment.	Check and adjust pulley alignment.
	2. Too high or low belt tension.	Check and adjust belt tension.
	3. Excessive grease or lack of grease in bearings.	Disassemble, clean and regrease bearings.
	4. Foreign material in bearings.	Disassemble, clean and regrease bearings.
	5. Bearing covers too tight or loose.	Adjust bearing covers.
	6. Improper bearing assembly.	Disassemble and check.

Usually the reason for an operating problem is a combination of two or more of the above mentioned possibilities and patience is required when checking out a system. An accurate reading of the air measurements is also very important in trying to locate the problem.

NOTES

SECTION 6 PARTS LIST

REMA CLASSIFIER PARTS LISTING

BEARING ASSEMBLY

1. Bearing Housing
2. Rotor Shaft
3. End Cap
4. End Cover
5. Top Retainer
6. Bottom Retainer
7. Ball Bearing
8. Fan Blade
9. Spider Ring
10. Top Retaining Ring
11. Hub
12. Bottom Carrier Ring
13. Retaining Ring
14. Rotor Blade
15. Key
16. Lock Bolt
17. Adjustable Set Collar
18. Spacer Ring
19. Jam Nut
20. Washer
21. Pulley
23. Motor
24. Housing, Discharge
25. Housing, Upper Cyclone
26. Drive Guard
27. Belt
28. Pulley
29. Screw
30. Washer
31. Screw
32. Washer
33. Nut
34. Dowel/Roll Pin
35. Screw.
36. Washer
37. Screw
38. Screw
39. Washer
40. Lockwasher
41. Nut
42. Screw
43. Access Door
44. Housing, Secondary Air
45. Access Door
46. Access Door
47. Housing, Rotor level
48. Washer
49. Screw

Call toll free 1-800-323-5735 outside Illinois or 708-656-8500.

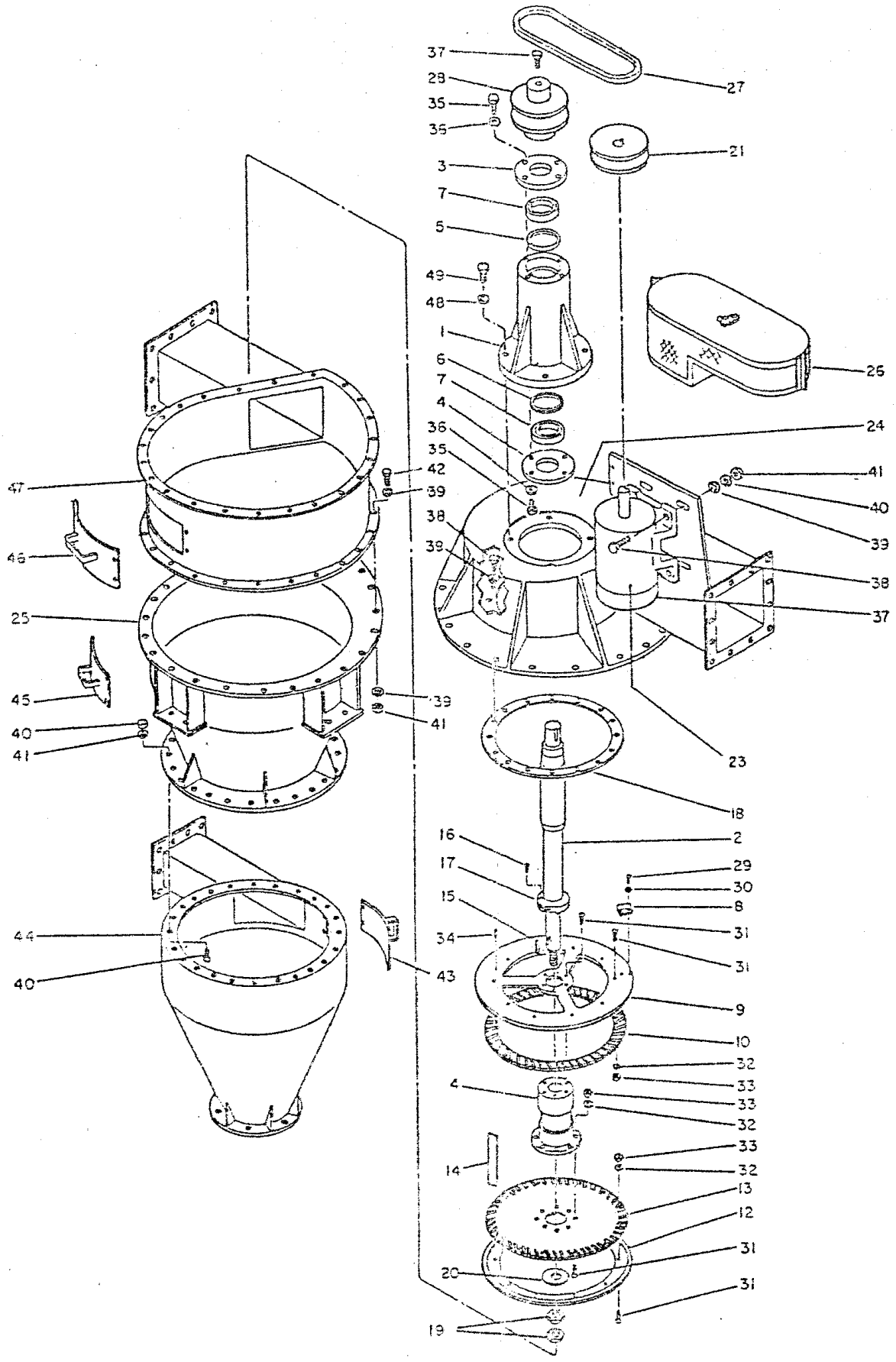

Illustration 6-1
REMA Classifier

APPENDIX A

A.1 Air Flow Determination

The efficiency of a classifier is dependent upon its speed of rotation and the airflow passing through it. The air flow should be established with the rotor running but without feed on and should be maintained at a constant volume. Proper air flow is essential for efficient production. This discussion outlines methods for measuring air flow in an operating system. Permanent pitot tubes (U-shaped glass tubes) should be mounted in the system where ever possible with at least one within the clean airstream between dust-collector and main blower. In order to get a proper reading, choose the right check point 2 to 3 feet away from bends, inlets and outlets, valves or other obstacles in duct work. Generally a 1/2 inch hole is sufficient.

Daily checks on the proper air volume ensure a safe performance of the system. Checks are necessary if:

- Feed products change
- Rotor speeds have been changed
- Cut point has been changed
- The system is started after a long shut down
- Rotor blades show signs of wear.

A.1.1 Required Air Flow

Table A-1 lists the REMA Classifier models matched with motor speed in RPMs and required air flow volumes in cubic feet per minute.

MODEL	RPM	CFM
MAC-0	3600	650
MAC-1	1800	1,350
MAC-2	1200	2,900
MAC-3	1200	5,900
MAC-4	1200	7,750
MAC-5	1200	10,800

Table A-1
Mininimum Air Flows

A.2 Air Flow and Air Pressure Relationships

We must first review some basic principles of air flow and pressure, and then show how to obtain the required value of Velocity Pressure. In the illustrations that follow, we show a simple U-shaped glass tube connected to an air duct with flexible tubing. The U-tube holds water and has marked graduations showing inched of water column on both legs of the tube.

In determining static pressure, one end of the U-tube is open to atmospheric pressure and the other end is connected to a port at the side of the air duct as shown in Illustration A-1.

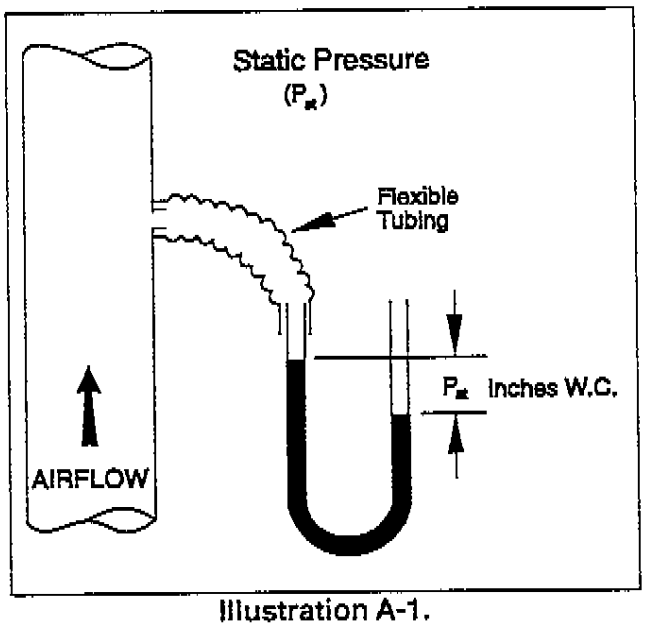

Illustration A-1.
Static Pressure

The total pressure measurement differs from static pressure in that a rigid elbow extends into the duct to gage the force of the moving air stream as shown in Illustration A-2.

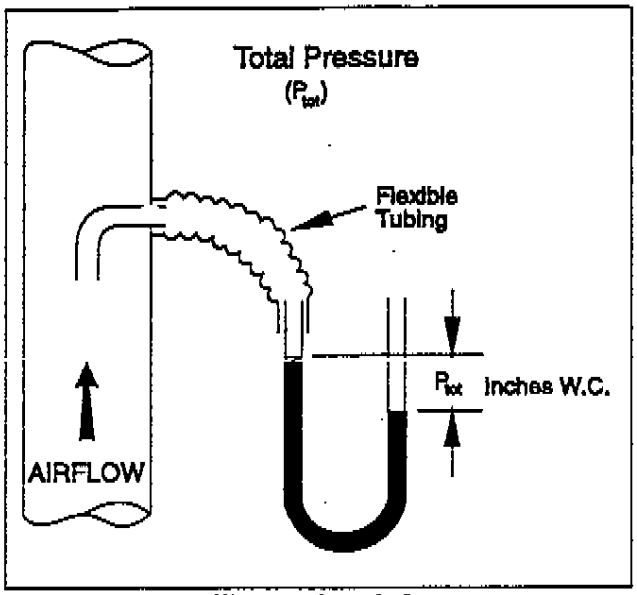

Illustration A-2.
Total Pressure

The velocity pressure measurement connects both ends of the U-tube to the air duct; one to the side and the other in the air stream with a rigid elbow as shown in Illustration A-3.

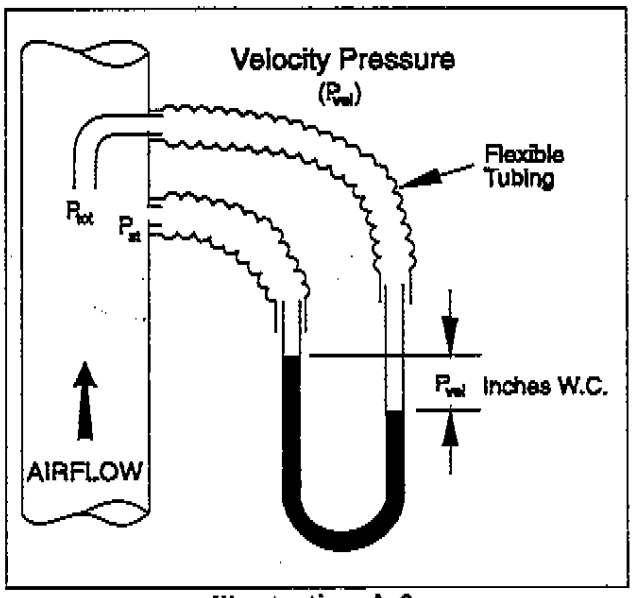

Illustration A-3.
Velocity Pressure

The three types of pressures are related in the manner:

$$P_{tot} = P_{vel} + P_{st}$$

$$P_{vel} = P_{tot} - P_{st}$$

A.3 Sample Calculation

The following example shows how to calculate air flow in cubic feet per minute.

If using the U-tube as shown in Illustration A-1 and A-2, you measure :

- P_{st} at 14.0" W.C. (inches water column)
- P_{tot} at -12.5" W.C. (inches water column) and you know
- the duct diameter to be 10"

Then, you can use the formula:

$P_{tot} = P_{vel} + P_{st}$

to calculate the correct air flow in cubic feet per minute as follows:

1. $-12.5 = P_{vel} + (-14.0)$
2. $P_{vel} = 14 - 12.5 = 1.5$

Using Table A-2, locate the intersecting columns for P_{vel} at 1.5, and Duct Diameter ar 10".

The Air Flow for this example is 2675 CFM.

Velocity Pressure can also be measured with a pitot tube in a configuration such as shown in Illustration A-4. The determination shown has the advantages of

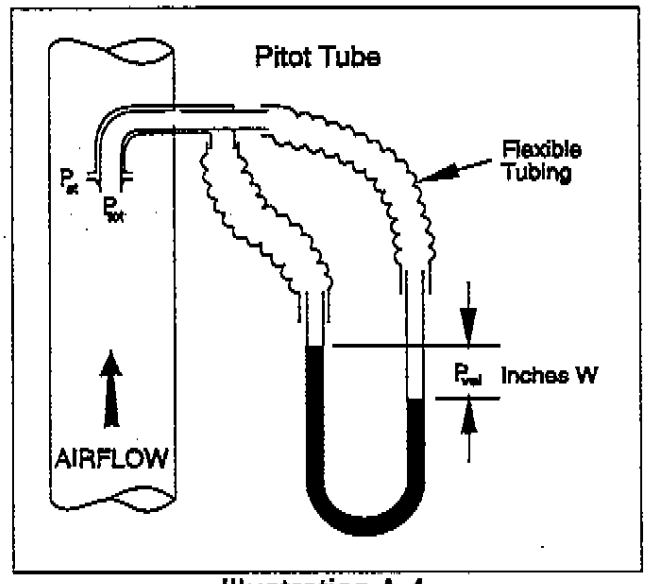

Illustration A-4.
Pitot Pressure

simplicity and of providing a direct reading of Velocity Pressure in inches of water column.

A.3.1 Velocity Pressure and Air Volume

With a value for P_{vel} obtained by any appropriate method, Table A-2 allows a direct reading of air flow in cubic feet per minute. The table covers duct diameters u to 18 inches and Velocity Pressures up to 2-1/2 inches of water column.

NOTE The examples shown describe the Negative air systems. In Positive systems the total pressure would be higher than the static pressure.

DUCT DIAMETER ⇒ (inches)		4	5	6	8	10	12	14	16	18
DUCT AREA ⇒ (square feet)		.0873	.1464	.1964	.3491	.5454	.7854	1.069	1.396	1.767
VELOCITY PRESSURE (inches W.C.) ⇓	AIR SPEED (fpm) ⇓	AIR FLOW ⇓ (cubic feet per minute)								
.10	1266	110	173	249	442	690	994	1353	1767	2237
.20	1791	156	244	352	625	960	1407	1914	2500	3165
.30	2194	191	299	431	766	1197	1723	2345	3063	3877
.40	2533	221	345	497	884	1381	1989	2708	3536	4478
.50	2832	247	386	556	989	1544	2224	3027	3953	5004
.60	3102	271	423	609	1083	1692	2436	3316	4330	5481
.70	3351	292	457	658	1170	1828	2632	3582	4678	5921
.80	3582	313	488	703	1250	1954	2813	3829	4861	6329
.90	3799	332	518	746	1326	2072	2984	4061	5303	6713
1.00	4005	350	546	787	1398	2184	3145	4281	5591	7077
1.10	4200	367	573	825	1466	2291	3299	4490	5863	7421
1.20	4387	383	598	852	1531	2393	3445	4690	6124	7752
1.30	4566	399	623	897	1594	2490	3586	4881	6374	8068
1.40	4739	414	646	931	1654	2584	3722	5066	6616	8374
1.50	4905	428	669	963	1712	2675	3852	5243	6847	8677
1.60	5066	442	691	995	1768	2763	3979	5415	7072	8952
1.70	5222	456	712	1026	1823	2848	4101	5582	7290	9227
1.80	5373	469	733	1055	1876	2930	4220	5743	7500	9494
1.90	5521	482	753	1084	1927	3011	4336	5902	7707	9756
2.00	5664	494	773	1112	1977	3089	4448	6055	7907	10008
2.10	5804	506	791	1140	2026	3165	4558	6204	8102	10255
2.20	5940	518	810	1167	2074	3240	4665	6350	8292	10496
2.30	6074	530	828	1193	2120	3313	4770	6493	8479	10733
2.40	6205	542	846	1219	2166	3384	4873	6633	8662	10964
2.50	6332	553	864	1244	2210	3453	4973	6769	8839	11189

Table 2
Air Volume Measurement

NOTES

APPENDIX B
VARIABLE SPEED BELT DRIVE

B.1 Operating Instruction

WARNING **ALL OPEN BELT SYSTEMS MUST BE ADEQUATELY GUARDED FOR PERSONAL SAFETY DURING OPERATION.**

B.1.1 General

A controllable and spring loaded pulley are used in conjunction as a fixed center pair. These pulleys when installed with a belt offer infinite speed variation between two fixed speeds.

The pulleys have been permanently lubricated and no additional lubrication is required. Cycling the drive through the entire speed range is not required.

Keep the belt and pulleys clean, cry, and free from grease. Although sealed bearings are fitted in the units, it is important that they are kept free of washing detergents or acid solutions.

Check belt alignment periodically. (See Installation Instructions)

Occasionally check set screws retaining the pulley on the motor shaft for tightness.

B.1.2 Controllable Pulley

To vary the speed, rotate the handwheel (clockwise for increase speed) and (counter-clockwise for decrease speed). Do not adjust the speed unless the pulley system is in operation.

The controllable pulley is provided with mechanical speed stops on the threaded control stem which limits travel of the moveable pulley face. The one stop limiting low speed is the handwheel. The stop regulating high speed is on the inside of the pulley.

Resistance to adjustments of the handwheel in either direction will be due to these stops. Do not force the handwheel against these stops. These stops are set at the factory for the full speed range, and should not be altered unless a modified speed range is desired. The stops may be adjusted to suit your specific speed range needs. (See Adjusting The Speed Stops)

Handwheel drag is set at the factory during assembly. This drag prevents handwheel creep during operation, but still permits ease of adjustment. Due to normal wear and environment the drag setting may change. To readjust tighten set screw in the thrust nut.

B.2 Installation Instructions

1. It is essential that motor and driven shafts are free from burrs or foreign material, and are parallel and at the proper center distance.
2. Thread torque arm into thrust nut on the controllable pulley. (See Illustration B-1)
3. Slide controllable pulley onto motor shaft after backing out set screws on fixed face to provide clearance for motor shaft and key. (Do not hammer on the pulley faces or handwheel during assembly) Tighten set screws after pulley is in proper position.

NOTE Mount pulley on shaft for full depth of bore, or maximum depth possible.

4. Torque arm must be retained from rotation in a way which allows it to move axially as the controllable pulley's moveable face is cycled from one position to another. (See Illustration B-1)

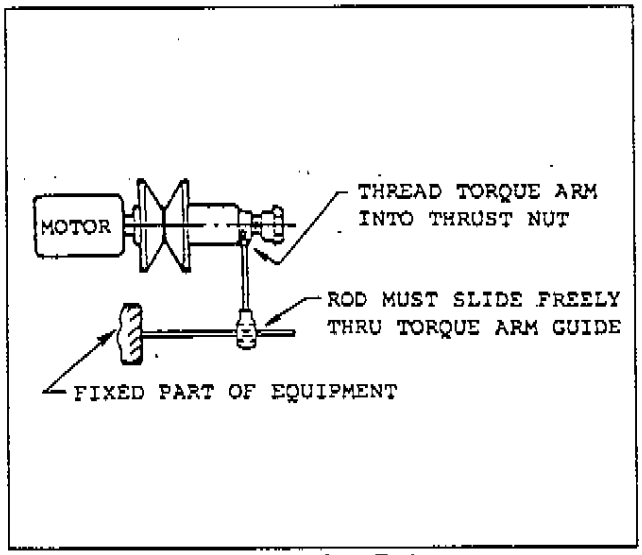

Illustration B-1.

5. Turn handwheel of controllable pulley counter-clockwise until moveable face is fully opened.
6. Slide spring loaded pulley onto the driven shaft but do not lock in position at this time. Driven pulley should be approximately that position shown by the offset dimension (See Illustration B-2)

PULLEYS COMBINATION	OFFSET A	DIMENSION B
406-5116	1 23/32	1 31/64
407-5127	2	1 29/32
409-5151	2 7/16	2 9/32
411-5112	3 15/64	3 3/32
414-5122	2 27/32	3 1/4
414-5133	3 1/4	3 1/8

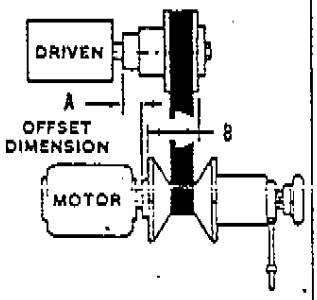

Illustration B-2.

7. Install belt by; first, placing belt into open controllable pulley, grasp belt twisting it 90 degrees away from you and place edge down into driven pulley.Rotate driven pulley by hand until belt rolls into driven pulley.
8. Adjust moveable face of the controllable pulley so that there is a slight tension of the belt.
9. Align drives by placing a straightedge against outside face of driven pulley. Belt must be parallel to straightedge within 1/32" along length of the straightedge. Check alignment of belt at both top and bottom of the system. Note that a difference in distance between belt and straightedge at top and bottom of system indicates that motor and driven shafts are not parallel. When alignment is correct, tighten spring loaded pulley securely onto driven shaft. Check alignment again after drive is tightened. (See Illustration B-3)
10. Start motor and cycle drive system thru its speed range. Bring the drive back to a low speed and turn off motor. Check again for alignment.

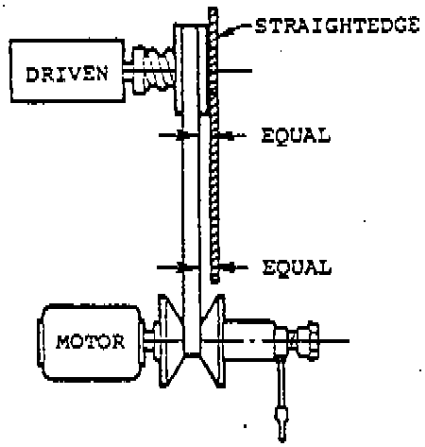

Illustration B-3.

NOTE The principle of this type of fixed center drive is based on the fact that the moving faces of both pulleys slide in opposite directions. If it is found that both faces side in the same direction, then the system is incorrect. The driven pulley should be reversed, in which case a reverse bore type should be purchased to replace the standard one. (See Illustration B-4)

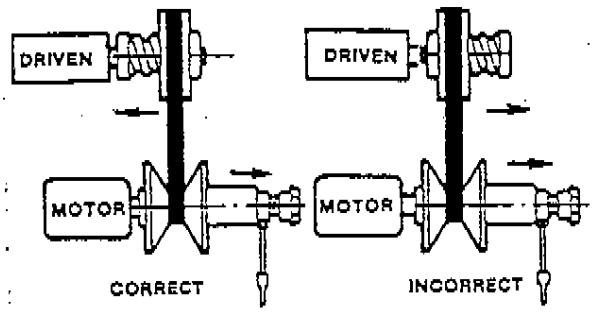

Illustration B-4.

B.3 Adjusting the Speed Stops

1. Follow installation instructions and cycle drive to desired high speed. Measure distance between moveable and fixed face on controllable pulley after stopping drive system in this high speed position.
2. Remove variable speed belt by opening the controllable pulley. This results in a slack belt. Roll belt over outboard face of driven pulley until belt is free. Slip belt over drive pulley.
3. Rotate handwheel of controllable pulley clockwise until it stops. Do not force.
4. Remove threaded plug from moveable face hub of controllable pulley.
5. Turn handwheel counter-clockwise, part of one turn, until set screw in stop is visible in plug opening. Check for quantity of (1) or (2) set screws.
6. Insert allen wrench into set screw and loosen. While holding wrench in set screw, turn handwheel counter-clockwise until opening between pulley faces reaches desired setting.
7. Tighten set screw in stop and replace plug in pulley's movable face. Install belt and cycle drive thru speed range.
8. Low speed limit stop is the handwheel. Cycle the drive to its low speed position. Adjust handwheel after loosening set screws until it makes contact with thrust nut. Lock set screws.

B.4 Disassembly - Spring Loaded Pulley

1. Place pulley under an arbor press, and place a parallel either side of sporing cap far enough apart to leave the spring retainer ring exposed.
2. Exert enough pressure to compress the spring, and remove the retainer ring.
3. Release pressure gradually until the spring has opened and can be slid off the unit.

CAUTION **SPRING PRESSURE CAN BE CONSIDERABLE, AND IF RELEASED SUDDENLY MAY FLY OPEN AND INJURE THE OPERATOR. ON SOME UNITS, THE SPRING IS RETAINED IN A CARTRIDGE* AND THE CARTRIDGE AND SPRING MAY BE TAKEN OFF COMPLETE WITH NO HAZARD. IF IN DOUBT AS TO THE TYPE OF UNIT TREAT WITH EXTREME CARE.**

* On the 5100 Series (Except 5133) the Spring Cartridge is integral with the moving face.

4. The moving face and hub can now be slid from the pulley shaft.
5. Assembly is a reverse of above procedure.

B.5 Disassembly - Controllable Pulley

1. Loosen handwheel set screws, and unscrew handwheel from control stem.

NOTE Thread is left hand.

2. Loosen set screws in thrust nut.
3. Hold thrust nut firm and unscrew control stem completely. The moving face and hub can now be slid free from the unit.
4. The inner bearing and control stem sub-assembly are a press fit in the pulley shaft. Some units have a retainer ring next to the bearing as added support. This ring must be removed. For removal of the bearing sub-assembly an arbor press is usually necessary. Press out with a length of tube from the opposite end of the pulley shaft.
5. Assembly is a reverse of above procedure.

NOTE When pressing control stem/bearing sub-assembly into shaft, be sure to use a "tubing type" pusher that locates on the outer race of bearing.

B.6 Parts Identification

When opdering replacement parts, give pulley model number, spec. no. (If Any) and name of part desired.

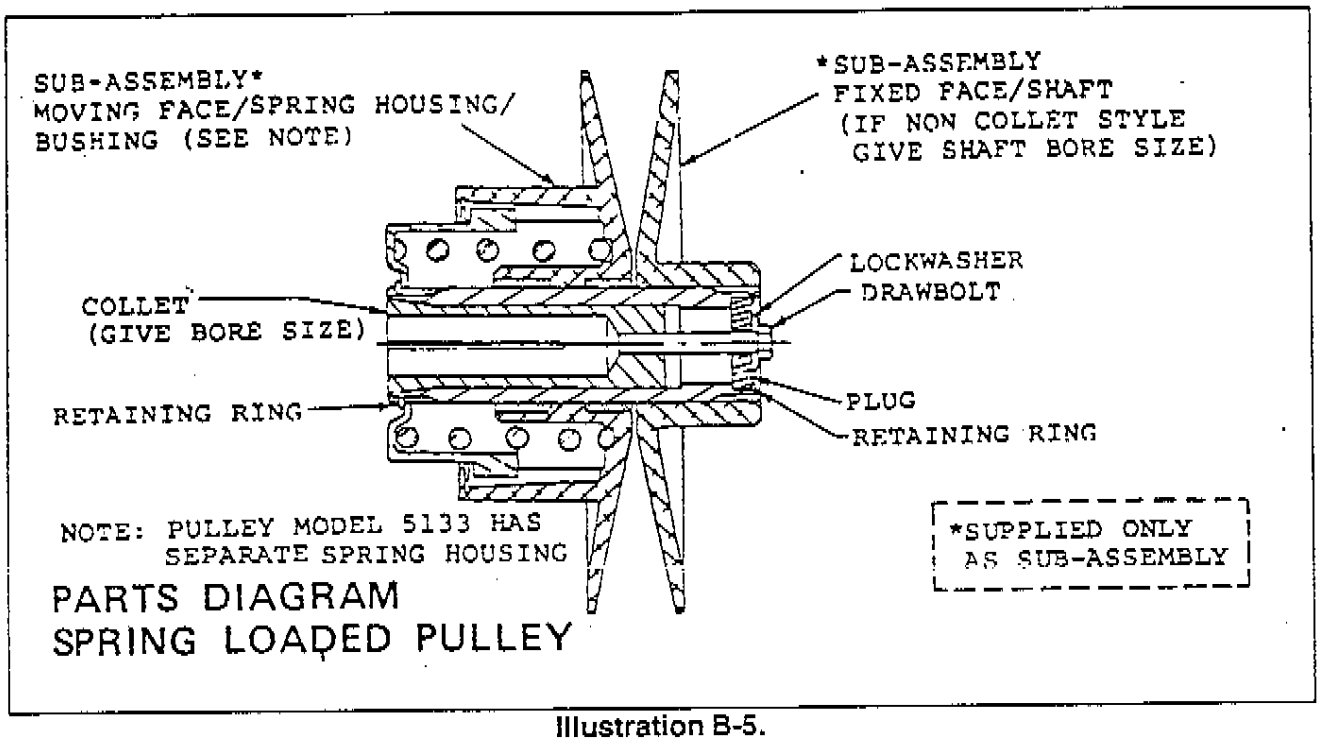

Illustration B-5.
Parts Diagram—Spring Loaded Pulley

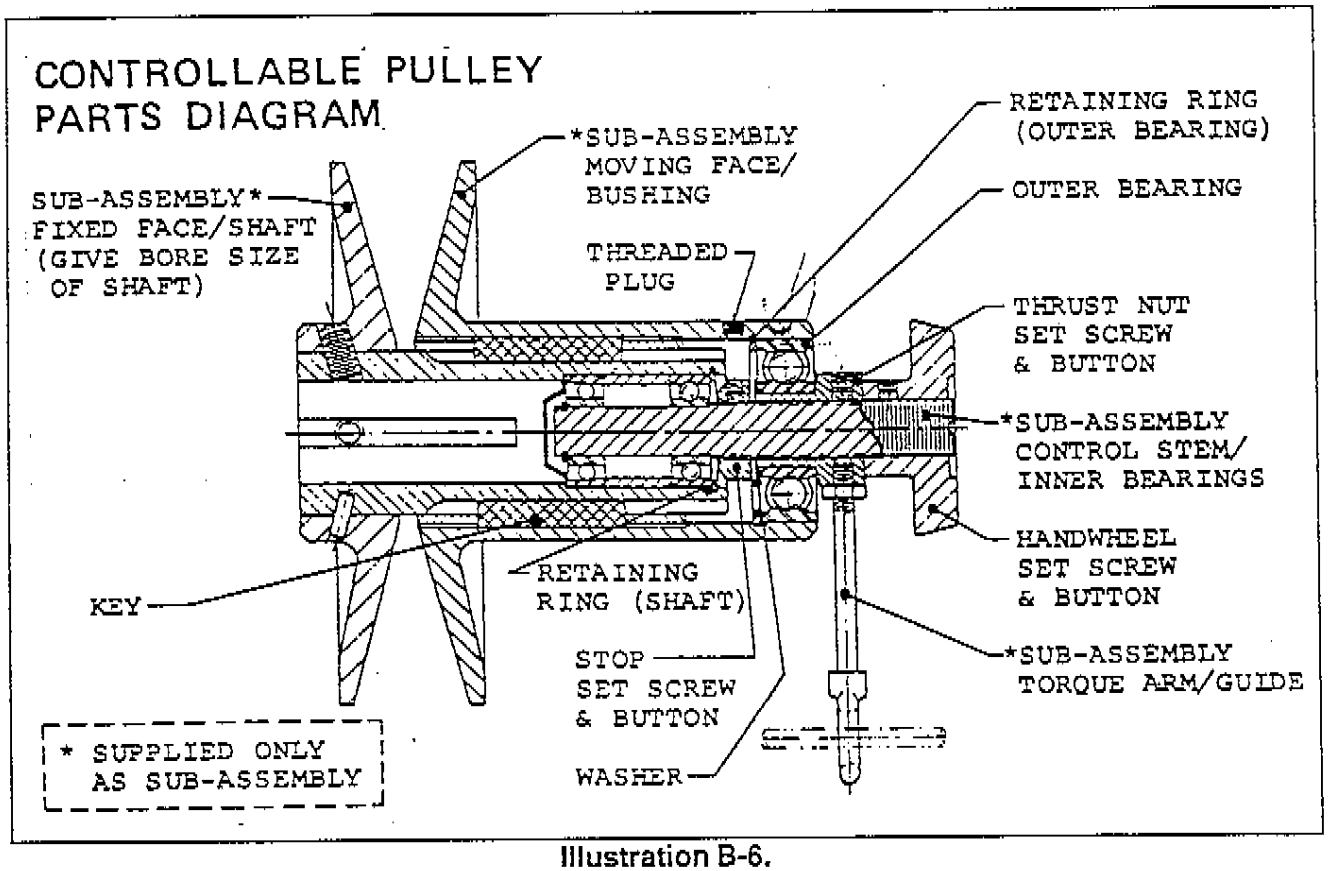

Illustration B-6.
Parts Diagram—Controllable Pulley

FINE GRINDERS
HAMMERMILLS
FLAKE/LUMP BREAKERS
COMPACTORS/BRIQUETTERS
AIR CLASSIFIERS
CENTRIFUGAL SIFTERS
VIBRATING SCREENS
ROTARY FEEDERS
QUICK-TAKE-APART AIRLOCKS
MINI-SIFTERS
BATCHING SYSTEMS
MODULAR WEIGHING SYSTEMS
BAGGING CONTROLS

2 Sammons Court, Bolingbrook, IL 60440
Main: 630.759.9595 Fax: 630.759.6099
www.praterindustries.com info@praterindustries.com